THIS DRAWING IS UNPUBLISHED. RELEASED FOR PUBLICATION -,- .
© COPYRIGHT - By - ALL RIGHTS RESERVED.

LOC	DIST
AF	50

REVISIONS

P	LTR	DESCRIPTION	DATE	DWN	APVD
	H	REVISED PER ECR-12-013445	09NOV12	KH	PD

1 CONTINUOUS STRIP ON REELS.

2 WIRE SIZE 22-18 AWG

3 INSULATION RANGE .090-.130 DIA

4 MATING TAB THK IS .032±.001

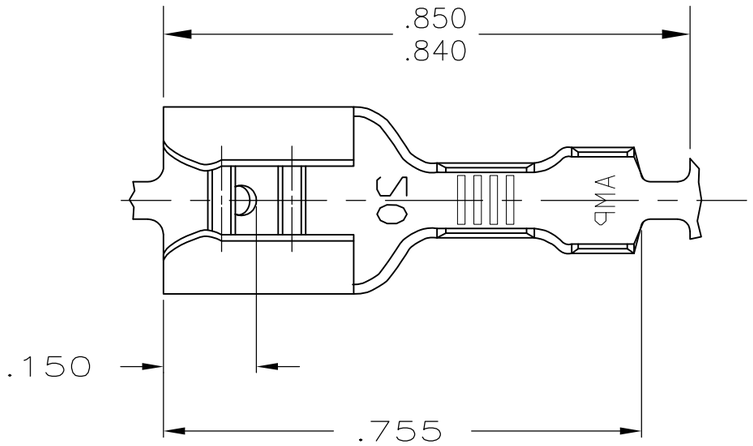

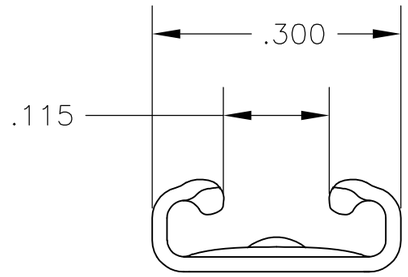

VIEW A-A

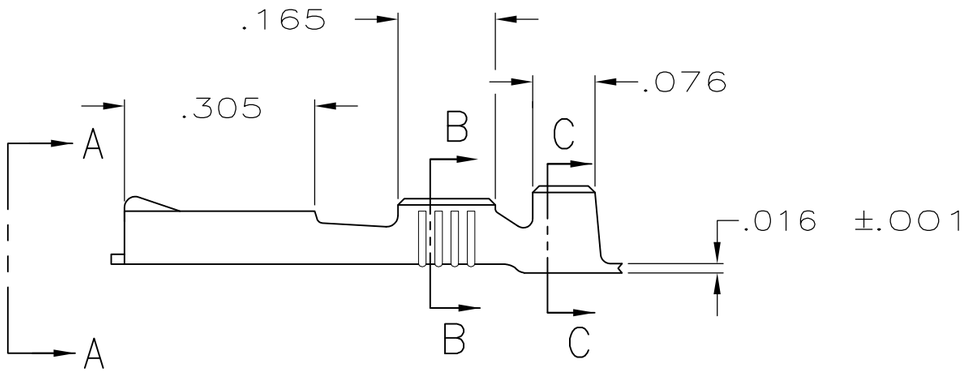

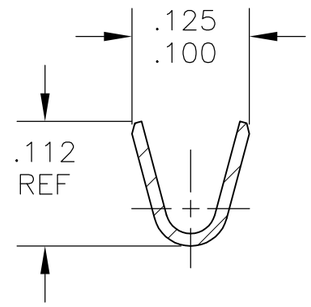

SECTION B-B

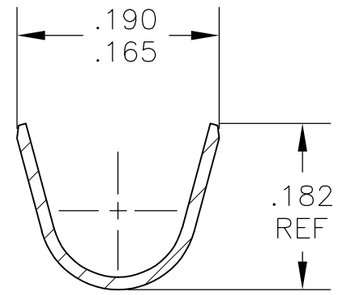

SECTION C-C

FINISH	PART NO
TIN	42743-2
—	42743-1

THIS DRAWING IS A CONTROLLED DOCUMENT.

DIMENSIONS: INCHES

TOLERANCES UNLESS OTHERWISE SPECIFIED:

0 PLC	± -
1 PLC	± -
2 PLC	± -
3 PLC	± .015
4 PLC	± -
ANGLES	± -

MATERIAL: BRASS

FINISH: SEE ABOVE

DWN JR RUTH 5-14-86
CHK G YETTER 5-16-86
APVD C MEYERS 5-16-86
PRODUCT SPEC —
APPLICATION SPEC 114-2036
WEIGHT —

TE Connectivity

NAME: .250 SERIES FASTON RECEPTACLE

SIZE	CAGE CODE	DRAWING NO	RESTRICTED TO
A3	00779	C-42743	—

CUSTOMER DRAWING

SCALE	SHEET	REV
4:1	1 OF 1	H