Copyright FCI.

FCIconnect.com

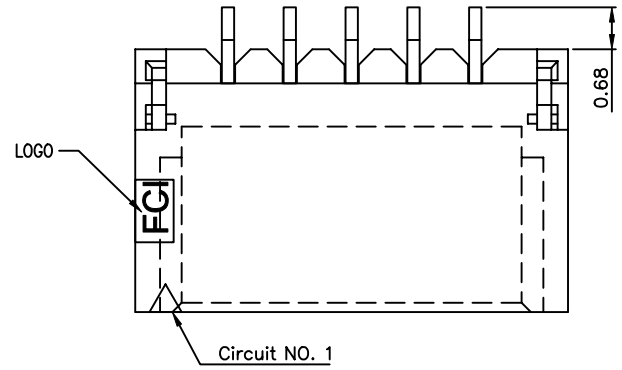


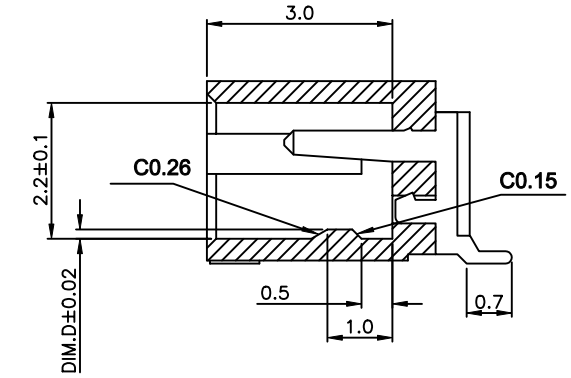


SECTION X–X

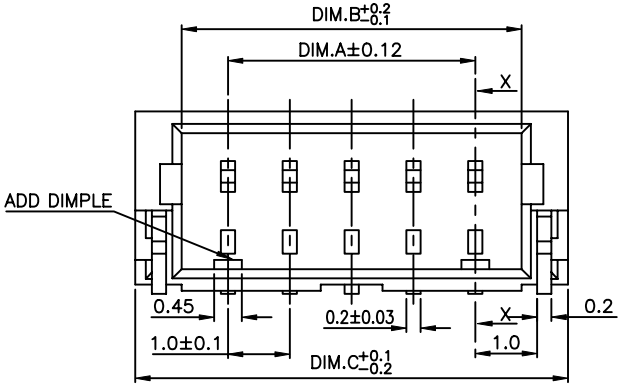


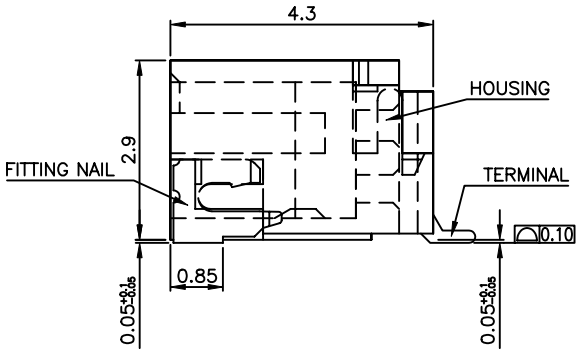


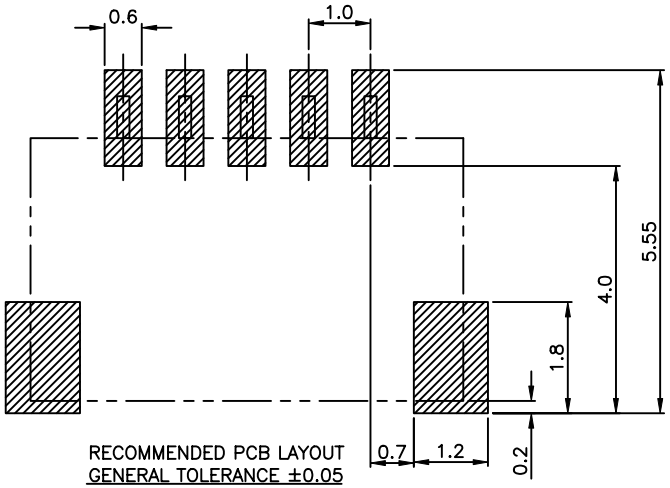


RECOMMENDED PCB LAYOUT
GENERAL TOLERANCE ±0.05

NOTES:

1. MATERIAL:
   HOUSING: HALOGEN FREE HIGH TEMPERATURE THERMOPLASTIC, UL94V–0.
   TERMINAL: COPPER ALLOY.
   FITTING NAIL: COPPER ALLOY.
2. FINISH:
   UNDER PLATING: 30~60u" NICKEL OVERALL.
   CONTACT AREA , SOLDER TAIL AND FITTING NAIL: SELECTIVE GOLD PLATED OVERALL(SEE P/N DESCRIPTION).
3. REFLOW SOLDER CAPABLE TO 260°C PEAK TEMP. FOR 10 SECONDS MAX.
4. SPEC. PLS. REFER TO GS–12–0930.
5. PACKAGE PLS. REFER TO GS–14–2103.
6. PART NUMBER DESCRIPTION:
   10116782–XXX X X X LF
   - XXX: NO OF CONTACTS(CKT)
   - X: PACKING 0: TAPE & REEL
   - X: PLATING 1: 1u" MIN. GOLD FLASH OVERALL (TERMINAL AND FITTING NAIL)
   - X: COLOR 0: BLACK
   - LF: LEAD FREE

ORDERING INFORMATION FOR USER REFERENCE

| NAME | | PART NO. |
|---|---|---|
| BOARD CONN. | | 10116782–XXXXXXLF |
| CABLE CONN. | HOUSING(WIRE SIDE) | 10116783–XXXXXXLF |
| | TERMINAL(AWG 28~32) | 10116784–XXX |

| CKT | Dim.A | Dim.B | Dim.C | Dim.D | CKT | Dim.A | Dim.B | Dim.C | Dim.D |
|---|---|---|---|---|---|---|---|---|---|
| 002 | 1.0 | 2.4 | 4.0 | 0.20 | 012 | 11.0 | 12.4 | 14.0 | 0.15 |
| 003 | 2.0 | 3.4 | 5.0 | | 013 | 12.0 | 13.4 | 15.0 | 0.08 |
| 004 | 3.0 | 4.4 | 6.0 | | 014 | 13.0 | 14.4 | 16.0 | |
| 005 | 4.0 | 5.4 | 7.0 | 0.15 | 015 | 14.0 | 15.4 | 17.0 | |
| 006 | 5.0 | 6.4 | 8.0 | | 016 | 15.0 | 16.4 | 18.0 | |
| 007 | 6.0 | 7.4 | 9.0 | | 017 | 16.0 | 17.4 | 19.0 | |
| 008 | 7.0 | 8.4 | 10.0 | | 018 | 17.0 | 18.4 | 20.0 | |
| 009 | 8.0 | 9.4 | 11.0 | | 019 | 18.0 | 19.4 | 21.0 | |
| 010 | 9.0 | 10.4 | 12.0 | | 020 | 19.0 | 20.4 | 22.0 | |
| 011 | 10.0 | 11.4 | 13.0 | | 022 | 21.0 | 22.4 | 24.0 | |

| | | | |
|---|---|---|---|
| mat'l. code | surface ASME Y14.5 ✓ | tolerance ASME Y14.5 | projection |
| ltr / ecn no / dr / date | tolerances unless otherwise specified | | product family: WTB |
| A / WL / 05/11/11 | angles X°±2° | linear .X ± 0.25 / .XX ± 0.15 / .XXX ± 0.10 | MM [INCH] |
| | | | title: 1.0mm WTB CONN. SMT R/A S/R TYPE |
| | dr: WENDY CHEN 03/11/11 | | scale |
| | engr: WENDY CHEN 03/11/11 | | dwg no: 10116782 |
| | chr: WENDY CHEN 03/11/11 | | sheet 1 of 1 |
| | appd: GARY HSIEH 03/11/11 | | size: A4 |
| sheet index / revision sheet | A / 1 | | type: CUSTOMER Drawing |