PRODUCT NUMBER	L	M	P
PINB164MC3--	14.55	16.4	17.5
PINB170MC3--	15.15	17.0	17.5
PINB234MC3--	14.55	23.5	10.4

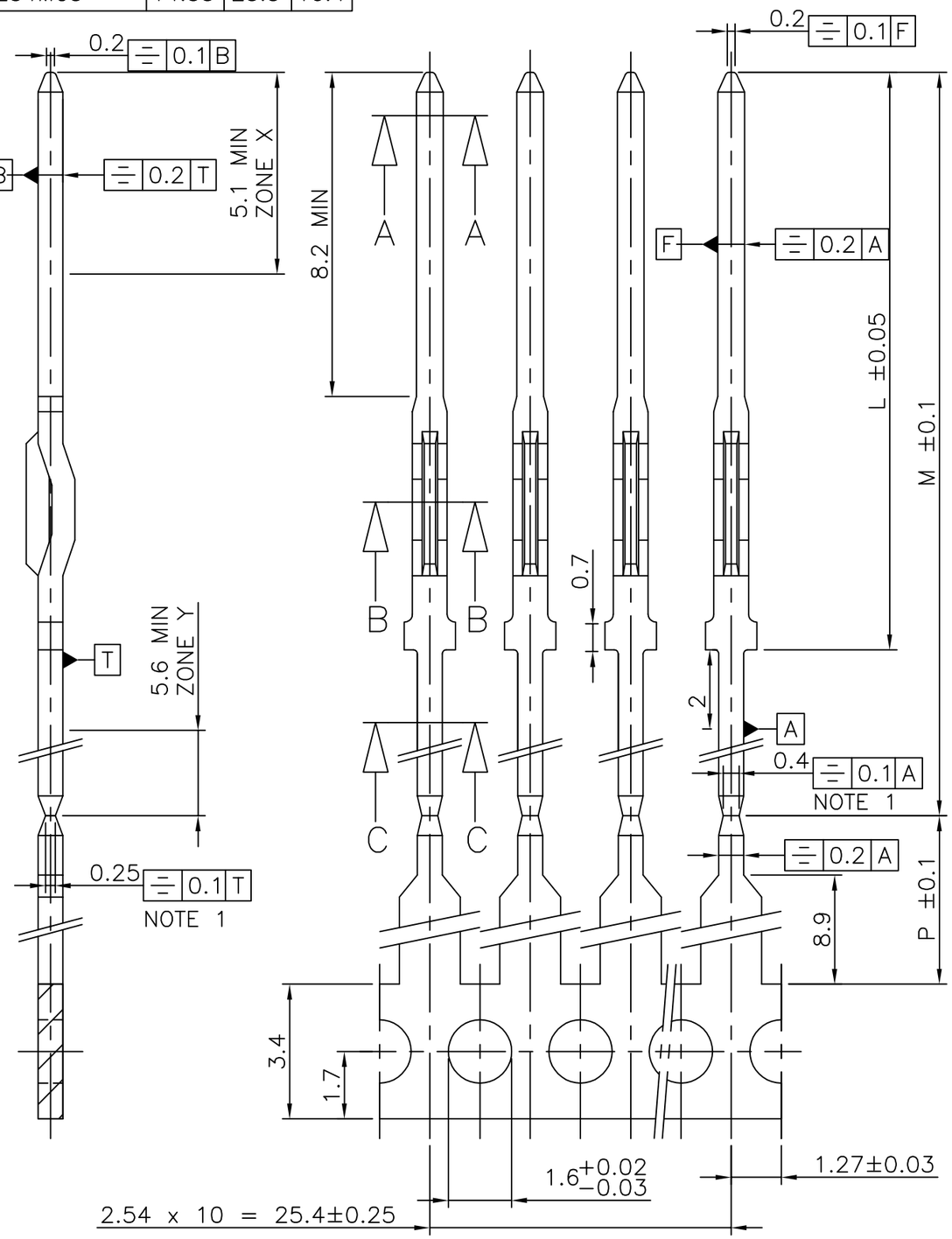

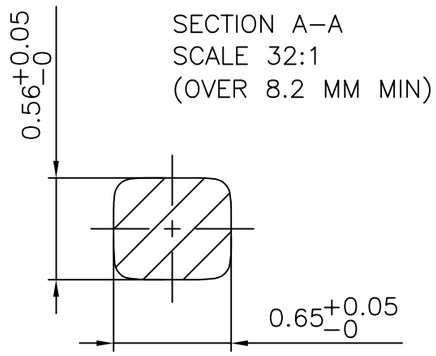

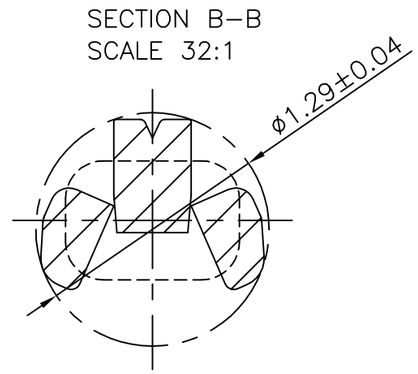

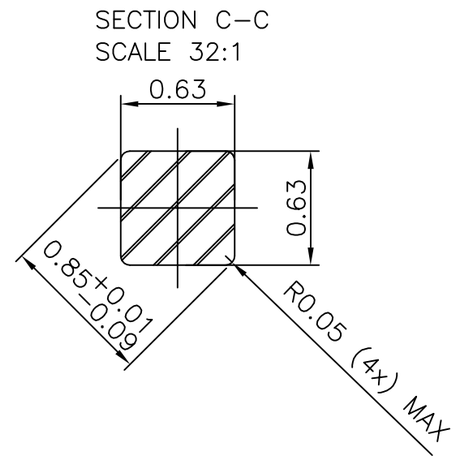

NOTES:
1 – ECCENTRICITIES ARE VALID AFTER REMOVAL OF CARRYING STRIP.
2 – PLATING: SEE SHEET 2.
3 – CONTACT MATERIAL: COPPER ALLOY

EUROPEAN PROJECTION

mat'l. code: SEE NOTES				surface: ISO 1302	tolerance: ISO 406 ISO 1101	projection	product family: PIN–B
ltr	ecn no	dr	date	tolerances unless otherwise specified			title: PRESS-FIT PIN COMPLIANT VXX27635
A	F03021	DLE	2003–03–03	angles	linear: 0.1±0.2	mm	
B	I05–0243	MINI	2005–11–22		0.01±0.1		
C	I06–0113	MINI	2006–07–11	±1°		scale 8:1	
D	I07–0130	KR	2007–10–04	dr	D.LEGRAND	2003–03–03	dwg no: VJW 55144 — sheet 1 of 2 — size A3
				engr	F.TISSERAND	2003–03–03	
				chr	KESAVAN.R	2007–10–04	
				appd	RAKHEE GEORGE	2007–10–04	type: Product Customer Drawing
sheet index	revision	D	D				
	sheet	1	2				

FCIconnect.com
Copyright FCI
form: A3

CONTACT TYPE	PLATING CODE	PLATING				CLASS	PRODUCT NO. CUSTOMER CODE
		ZONE Y	ZONE Z	ZONE W	ZONE X		
PINB (DRY PRESS-FIT)	GY	0.8μ Au MIN. OVER 2μ Ni MIN. OR (0.065μ Au MIN. + 0.69μ PdNi MIN.) OVER 2μ Ni MIN.	2 μ Ni MIN	0.05-1 μ SnPb OVER 2 μ Ni MIN	0.8μ Au MIN. OVER 2μ Ni MIN. OR (0.065μ Au MIN. + 0.69μ PdNi MIN.) OVER 2μ Ni MIN.	GRADE 1	1AB001520017 (PINB234MC3GY)
	GR	2 μ Ni MIN	2 μ Ni MIN	0.05-1 μ SnPb OVER 2 μ Ni MIN	0.8μ Au MIN. OVER 2μ Ni MIN. OR (0.065μ Au MIN. + 0.69μ PdNi MIN.) OVER 2μ Ni MIN.	GRADE 1	
	GW	0.8μ Au MIN. OVER 2μ Ni MIN. OR (0.065μ Au MIN. + 0.69μ PdNi MIN.) OVER 2μ Ni MIN.	2 μ Ni MIN	0.05-1 μ SnPb OVER 2 μ Ni MIN	2 μ Ni MIN	GRADE 1	
	GC	0.4μ Au MIN. OVER 2μ Ni MIN. OR (0.065μ Au MIN. + 0.38μ PdNi MIN.) OVER 2μ Ni MIN.	2 μ Ni MIN	0.05-1 μ SnPb OVER 2 μ Ni MIN	0.4μ Au MIN. OVER 2μ Ni MIN. OR (0.065μ Au MIN. + 0.38μ PdNi MIN.) OVER 2μ Ni MIN.	GRADE 1	
	Z1	0.05-1 μ SnPb OVER 2 μ Ni MIN	0.05-1 μ SnPb OVER 2 μ Ni MIN	0.05-1 μ SnPb OVER 2 μ Ni MIN	0.4μ Au MIN. OVER 2μ Ni MIN. OR (0.065μ Au MIN. + 0.38μ PdNi MIN.) OVER 2μ Ni MIN.	GRADE 1	PINB164MC3Z1

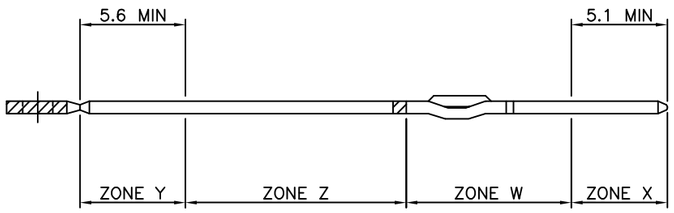

NOTES :

1. GOLD THICKNESS MEASURED WITH FISHERSCOPE X-RAY. MEASUREMENT OF GOLD THICKNESS WITHOUT CORRECTION FACTOR FOR THE GOLD DENSITY (DENSITY = 19.3)
2. THE "LF" PRODUCT MEETS EUROPEAN UNION DIRECTIVES AND OTHER COUNTRY REGULATIONS AS DESCRIBED IN GS-22-008.
3. "LF" SUFFIX TO PRODUCT NUMBER FOR LEAD FREE/RoHS COMPATIBLE VERSION.
4. FOR "LF" PRODUCTS SnPb PLATING IS REPLACED BY MATTE TIN. NO CHANGE IN PLATING THICKNESS AND UNDERCOAT PLATING.
5. FOR "LF" PRODUCTS LEAD FREE OR ROHS DIRECTIVE LABELLING TO BE PROVIDED AS PER PACKAGING SPECIFICATION GS-14-920.

mat'l. code –				surface ISO 1302	tolerance ISO 406 ISO 1101	projection
ltr	ecn no	dr	date	tolerances unless otherwise specified		
A	F03021	DLE	2003-03-03	angles	linear 0.1±0.2	mm
B	I05-0243	MINI	2005-11-22		0.01±0.1	
C	I06-0113	MINI	2006-07-11	±1°		scale –
D	I07-0130	KR	2007-10-04	dr D.LEGRAND 2003-03-03		
				engr F.TISSERAND 2003-03-03		
				chr KESAVAN.R 2007-10-04		
				appd RAKHEE GEORGE 2007-10-04		
sheet index	revision sheet					

product family: PIN-B

title: PLATING TABLE
SYSTEM 12 VXX27635

dwg no: VJW 55144 sheet 2 of 2 size A3

type: Product Customer Drawing

form: A3

FCIconnect.com
Copyright FCI