THIS DRAWING IS UNPUBLISHED. RELEASED FOR PUBLICATION -,- .
© COPYRIGHT - By - ALL RIGHTS RESERVED.

REVISIONS

P	LTR	DESCRIPTION	DATE	DWN	APVD
	L	REVISED PER ECO-16-001548	24FEB2016	AP	DG

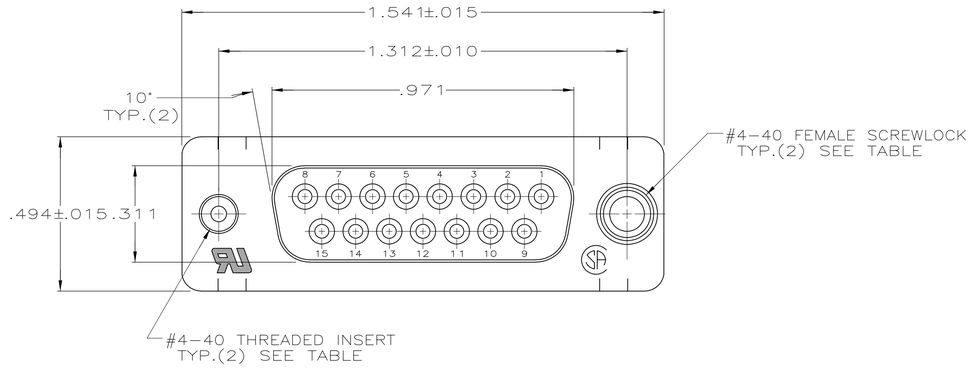

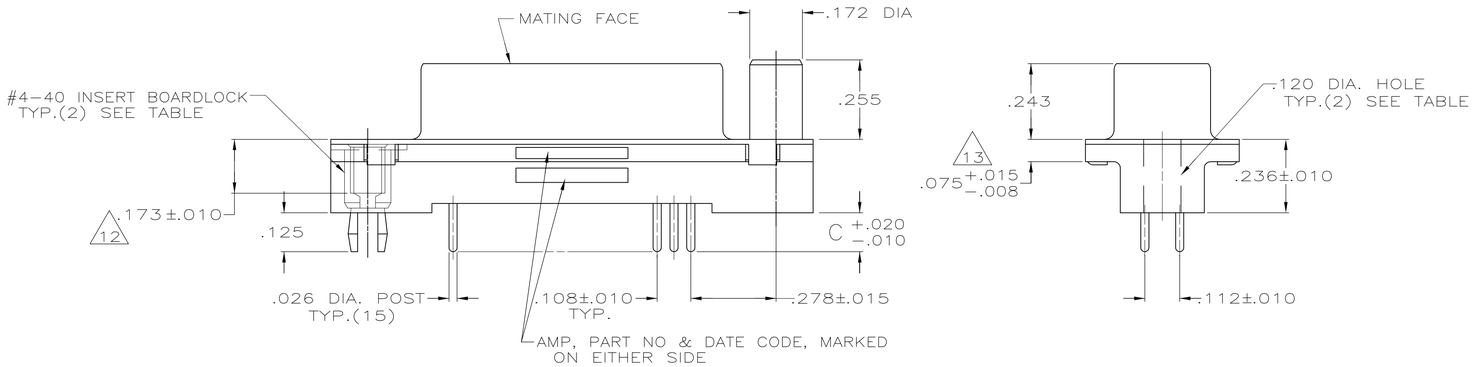

1. HOUSING: FLAME RETARDANT 94V-0 RATED THERMOPLASTIC; COLOR: BLACK.
2. SHELL: CARBON STEEL.
3. CONTACTS: PHOS. BRONZE.
4. INSERTS & BOARDLOCKS: BRASS, SCREWLOCKS: ZINC.
5. NOTE DELETED.
6. SHELL: .000200 MIN TIN OVER .000100 MIN COPPER.
7. INSERTS: UNPLATED, SCREWLOCKS: UNPLATED, BOARDLOCKS: TIN OVER COPPER.
8. CONTACTS: GOLD FLASH FOR LENGTH OF .100 MIN FROM MATING END, .000100-.000200 BRIGHT TIN OR BRIGHT TIN LEAD ON TERMINATION END, ALL OVER .000050 NICKEL ON ENTIRE CONTACT.
9. CONTACTS: .000030 GOLD FOR LENGTH OF .100 MIN FROM MATING END, .000100-.000200 BRIGHT TIN OR BRIGHT TIN LEAD ON TERMINATION END, ALL OVER .000050 NICKEL ON ENTIRE CONTACT.
10. NOTE DELETED.
11. DATUMS AND BASIC DIMENSIONS ESTABLISHED BY CUSTOMER.
12. RECOMMENDED SCREWLOCK IS 5747877-3 WITH RETENTION INSERTS.
13. .110 MAX IN SHELL TAB CLINCH AREAS.

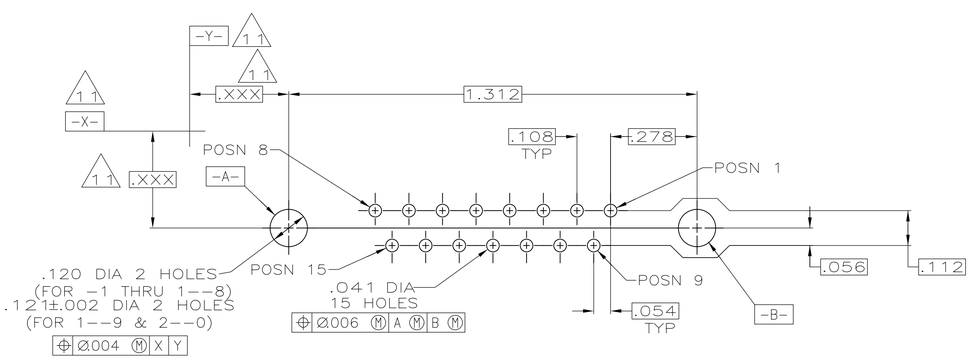

PC BOARD MOUNTING DIMENSIONS
CONNECTOR SIDE OF BOARD
.062 PC BOARD THICKNESS

	REMARKS	CONTACT FINISH	C	PART NUMBER
	WITH INSERT BOARDLOCKS	9	.125	2-747707-0
OBSOLETE		8	.125	1-747707-9
OBSOLETE	WITH FEMALE SCREWLOCKS	9	.250	1-747707-8
OBSOLETE		8	.250	1-747707-7
OBSOLETE		9	.170	1-747707-6
OBSOLETE		8	.170	1-747707-5
OBSOLETE		9	.125	1-747707-4
OBSOLETE		8	.125	1-747707-3
OBSOLETE	WITH THREADED INSERTS	9	.250	1-747707-2
OBSOLETE		8	.250	1-747707-1
OBSOLETE		9	.170	1-747707-0
OBSOLETE		8	.170	747707-9
SUPSD BY 747299-8		9	.125	747707-8
OBSOLETE		8	.125	747707-7
OBSOLETE	WITH .120 DIA. HOLE	9	.250	747707-6
OBSOLETE		8	.250	747707-5
OBSOLETE		9	.170	747707-4
OBSOLETE		8	.170	747707-3
OBSOLETE		9	.125	747707-2
OBSOLETE		8	.125	747707-1

THIS DRAWING IS A CONTROLLED DOCUMENT.

DIMENSIONS: INCHES

TOLERANCES UNLESS OTHERWISE SPECIFIED:
0 PLC ± -
1 PLC ± -
2 PLC ± -
3 PLC ± .005
4 PLC ± -
ANGLES ± 2°

MATERIAL 1 - 2 - 3 - 4
FINISH 6 - 7 - 8 - 9

DWN S. WELDON 2-27-85
CHK J. GERACE 2-27-85
APVD R.BEAR/R.BRANDT 2-27-85
PRODUCT SPEC 108-40025
APPLICATION SPEC 114-40023
WEIGHT -

TE Connectivity

NAME: RECEPTACLE ASSEMBLY, SIZE 2, 15 POS., VERTICAL, .026 DIA. DUPLEX PLATED POSTS, FRONT SHELL, AMPLIMITE

SIZE	CAGE CODE	DRAWING NO	RESTRICTED TO
A1	00779	C-747707	-

CUSTOMER DRAWING | SCALE NTS | SHEET 1 OF 1 | REV L

4805 (1/15)