THIS DRAWING IS UNPUBLISHED. RELEASED FOR PUBLICATION - ,- .
© COPYRIGHT - By - ALL RIGHTS RESERVED.

LOC	DIST
AD	00

REVISIONS

P	LTR	DESCRIPTION	DATE	DWN	APVD
	A3	REVISED PER ECO-11-010839	25MAY11	RK	HMR

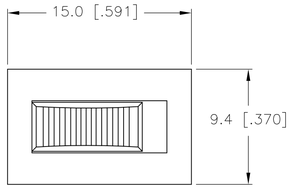

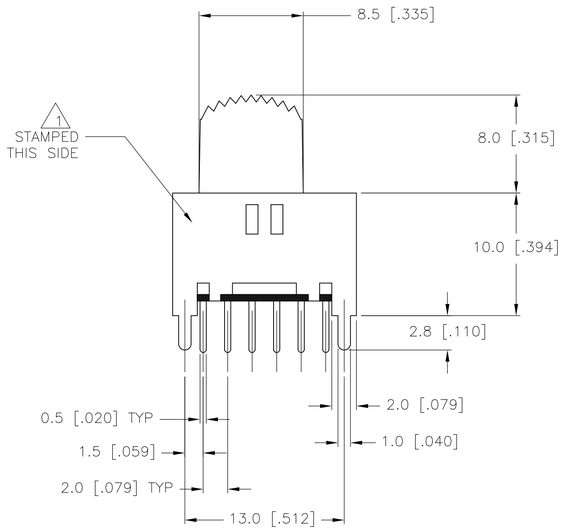

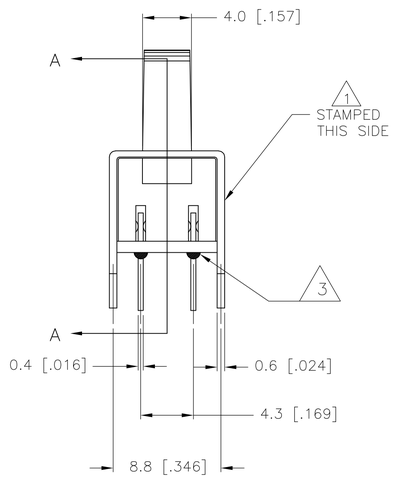

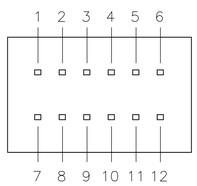

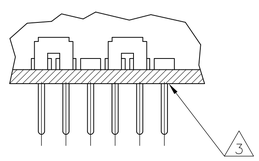

SECTION A–A

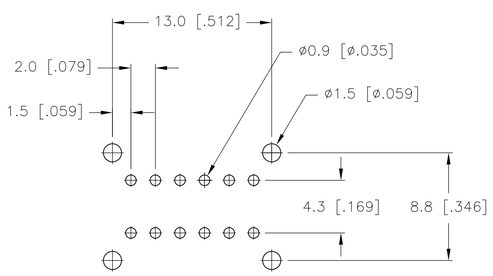

RECOMMENDED HOLE LAYOUT

SPECIFICATIONS
MAKE–BEFORE–BREAK

MATERIALS:
ACTUATOR– POM, UL94HB BLACK
TERMINAL BOARD– PHENOLIC LAMINATED SHEET, UL94HB, NATURAL
FRAME– STEEL, NICKEL PLATE
TERMINAL/FIXED CONTACT– COPPER ALLOY, GOLD OR SILVER OVER NICKEL PLATE
MOVING CONTACT– COPPER ALLOY, GOLD OR SILVER OVER NICKLE PLATE
DETENT BALL– STEEL
COIL SPRING– GALVANIZED SPRING WIRE
SEAL– EPOXY

ELECTRICAL:
CONTACT RATING– .4VA@20VDC OR PEAK AC (GOLD); 300mA@125V AC (SILVER)
INITIAL CONTACT RESISTANCE– 30 milliohm max.
FINAL CONTACT RESISTANCE– 100 milliohm max. (AFTER TEST)
INSULTAION RESISTANCE– 1,000 Megohms min.
DIELECTRIC STRENGTH– 500V RMS@SEA LEVEL
LIFE EXPECTANCY– 15,000 CYCLES MIN.

MECHANICAL:
ACTUATION FORCE– 600+/–300 GRAMS
TRAVEL– 2.0 +/–.50 (.079 +/–.020)

ENVIRONMENTAL:
OPERATING TEMPERATURE– –20 TO +85 DEGREES C
STORAGE TEMPERATURE– –40 TO +100 DEGREES C
RESISTANCE TO SOLDER HEAT PER 109–202, CONDITION B
SOLDERABILITY PER EIA–364–52, CLASS 2, CATEGORY 1, 95% MIN COVERAGE

NOTES:

1. COUNTRY OF ORIGIN AND TE LOGO LOCATED APPROXIMATELY AS SHOWN
2. ALL MATERIALS AND FINISHES SHALL COMPLY WITH EU DIRECTIVE 2002/95/EC OF 27JAN2003 (ROHS)
3. ANTI SOLDER WICK SEAL AT TERMINAL TO BOARD INTERFACE
4. ALL PERFORMANCE TESTING WAS DONE IN ACCORDANCE TO TE CONNECTIVITY SPECIFICATION 102–2469

PART NO.	T&B PART NO.	PLATING			
1825264–2	MSS4200G04	GOLD	1 TO 2 4 TO 5 7 TO 8 10 TO 11		2 TO 3 5 TO 6 8 TO 9 11 TO 12
1825264–1	MSS420004	SILVER	1 TO 2 4 TO 5 7 TO 8 10 TO 11		2 TO 3 5 TO 6 8 TO 9 11 TO 12

TERMINALS CONNECTED WHEN SLIDE IS IN POSITION SHOWN.

THIS DRAWING IS A CONTROLLED DOCUMENT.

DIMENSIONS: mm

TOLERANCES UNLESS OTHERWISE SPECIFIED:
0 PLC ± –
1 PLC ± 0.3 [.012]
2 PLC ± –
3 PLC ± –
4 PLC ± –
ANGLES ± –

MATERIAL –
FINISH –

DWN R BROWN 21DEC05
CHK M SARVER 21DEC05
APVD M SARVER 21DEC05
PRODUCT SPEC —
APPLICATION SPEC —
WEIGHT —

TE Connectivity

NAME SLIDE SWITCH, MSS 4200 SERIES

SIZE	CAGE CODE	DRAWING NO	RESTRICTED TO
A1	00779	C-1825264	—

CUSTOMER DRAWING | SCALE 4:1 | SHEET 1 OF 1 | REV A3

4805 (3/11)