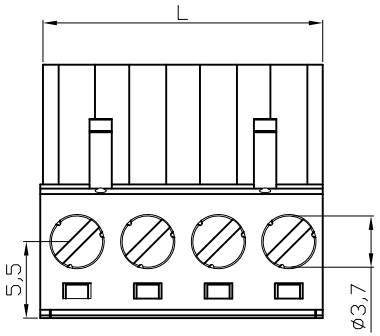

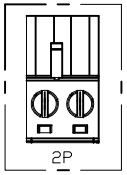

Material

a: Clamp: Brass(CuZn), Ni plated
b: Terminal screw: Steel Zinc plating "-" slot type
c: Female contact: PhBz, Tin plated
d: Terminal cover: Thermoplastic (UL94V-0), Green
e: Terminal(housing): Thermoplastic (UL94V-0), Green

Electrical cULus / CSA/VDE /TUV

Voltage rating: 300V/300V/300V
Current ratlng: 20A/20A/20A
Wire range: 2.5mm^2 / 0.34-2.5mm^2
Solld wlre(AWG): 12-24/14-22
Stranded wire(AWG): 12-24/14-22
Torque: 5Lb-In/0.5N.m/0.56N.m
Screw: M3
Wire strip length: 7-8mm
Withstanding Voltage: 1.6KV/2.5KV/2.5KV
Operating temperature: -40°C to +115°C
Use with OQ1.0x1.0mm square pin, Withdrawal force: 200-500gf/pole
Safety Approval:

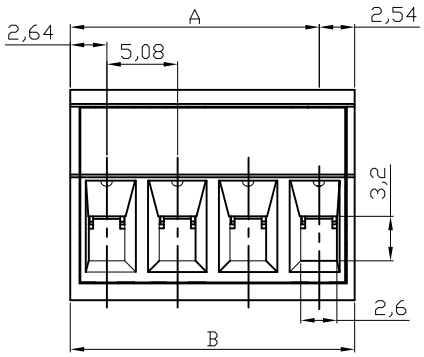

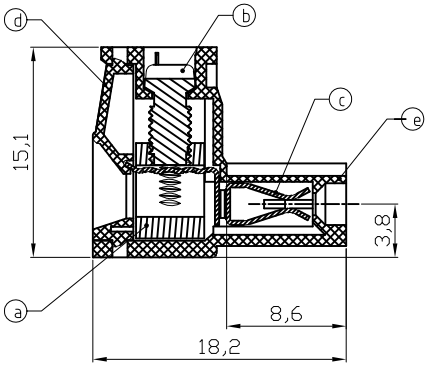

DIMENSION

L	Nx5.08
A	(N-1)x5.08
B	Nx5.08+0.1

N=Number of poles

Poles	Tolerance	
	DIM A	DIM L&DIM B
2p-6p	±0.15	±0.20
7p-12p	±0.20	±0.25
13p-18p	±0.25	±0.30
19p-24p	±0.30	±0.40

RoHS compliant

Scale	1:1
TOLERANCE	
X.	±0.50
X.X	±0.30
X.XX	±0.10
DIM	TOL
X.°	±1°
Angle	TOL

Id.	Modification	Date	Name
②	Updated drawing	15.10.2010	Rale
①	Drawn	10.12.2009	Dean

	Date	Name
Drawn	10.12.2009	Dean
Approved	15.10.2010	Hellwig

ASSMANN WSW components

Customer-No.

ASSMANN WSW-No.
A-TB508-TJxxD

Drawing-No.
ASS 3911 CO

rev02

Replace

Sheet

SV2088