REV	ECN NO	REVISIONS	DRN	CKD	APP	DATE
A	——	NEW RELEASE	AJF	KLJ	NO	7-30-09

DIALIGHT PART NUMBER	LED & LENS COLOR	TEST CONDITIONS	OPERATING CHARACTERISTICS AT 25°C AMBIENT								
			LUMINOUS INTENSITY (mcd)		FORWARD VOLTAGE (V)		FORWARD CURRENT (mA)		DOMINANT WAVELENGTH (nm)	PEAK WAVELENGTH (nm)	VIEWING ANGLE (DEG)
			MIN	TYP	TYP	MAX	MIN	MAX	TYP	TYP	TYP
555-4001F	RED, TINTED, DIFFUSED	I_F = 10mA	0.4	0.6	1.6	2.0	——	——	640	655	35
555-4003F	RED, TINTED, DIFFUSED, INT RES, 5V	V_F = 5V	1.0	2.5	——	——	3.7	8.70	640	655	35
555-4007F	RED, TINTED, DIFFUSED, INT RES, 5V	V_F = 5V	0.4	0.6	——	——	2.2	4.3	640	655	35
555-4008F	RED, TINTED, DIFFUSED, INT RES, 24V	V_F = 24V	0.4	0.6	——	——	2.3	4.1	640	655	35
555-4009F	RED, TINTED, DIFFUSED, INT RES, 5V	V_F = 5V	0.4	0.6	——	——	——	2.6	640	655	35
555-4301F	HI. PERF. GREEN, TINTED, DIFFUSED	I_F = 10mA	6.3	25	2.1	2.7	——	——	569	565	35
555-4303F	HI. PERF. GREEN, TINTED, DIFF, INT RES, 5V	V_F = 5V	1.0	2.0	——	——	3.3	13.0	569	565	35
555-4401F	YELLOW, TINTED, DIFFUSED	I_F = 10mA	16	50	2.0	2.4	——	——	585	583	35
555-4403F	YELLOW, TINTED, DIFFUSED, INT RES, 5V	V_F = 5V	1.6	5.0	——	——	3.5	5.3	585	583	35

LED COLOR	ABSOLUTE MAXIMUM RATINGS AT 25°C AMBIENT					
	DC FORWARD VOLTAGE	DC FORWARD CURRENT	REVERSE VOLTAGE (I_R=100mA)	OPERATING TEMPERATURE (°C)	STORAGE TEMPERATURE (°C)	SOLDERING TEMPERATURE (FOR 5 SEC)
RED	——	50 mA	5 V	-55 to +100	-55 TO +100	260 °C
RED, INT RES, 5V	6 V	——	5 V	-40 to +85	-55 TO +100	260 °C
RED, INT RES, 24V	24 V	——	5 V	-40 to +85	-55 TO +100	260 °C
GREEN	——	30 mA	5 V	-40 to +100	-55 TO +100	260 °C
GREEN, INT RES, 5V	6 V	——	5 V	-20 to +85	-55 TO +100	260 °C
YELLOW	——	20 mA	5 V	-55 to +100	-55 TO +100	260 °C
YELLOW, INT RES, 5V	6 V	——	5 V	-40 to +85	-55 TO +100	260 °C

RoHS Compliant 555-4X0XF

Part Numbers with the "F" suffix ending are RoHS Compliant.
Example: 555-4003F
Packaging is marked with "RoHS Compliant" label or equivalent markings. Parts can be wave soldered, dip soldered or hand soldered using typical lead-free soldering process with max 260°C temp. for 5 sec.

NOTES:

1. PIN MUMBERS FOR REFERENCE ONLY. DESIGNATION NON-EXISTENT ON PART.
2. DIALIGHT PART NUMBERS: 555-4X0XF.
3. THIS ASSEMBLY CONTAINS ELECTROSTATIC DISCHARGE SENSITIVE DEVICES (ESDS). MAINTAIN ALL PRECAUTIONARY MEASURES DURING ASSEMBLY, HANDLING, AND STORAGE IN ACCORDANCE WITH IPC-A-610.
4. LED LEAD DIMENSIONS SHOWN ARE MEASURED AT HOUSING EXIT.
5. LEADS TO FIT INTO HOLES SPACED AS PER PATTERN.
6. LED LEADS - PURE Sn PLATING OVER OLIN 194 COPPER ALLOY BASE METAL.

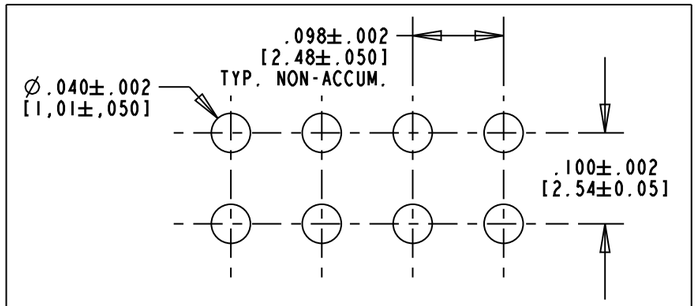

RECOMMENDED P.C. BOARD HOLE PATTERN

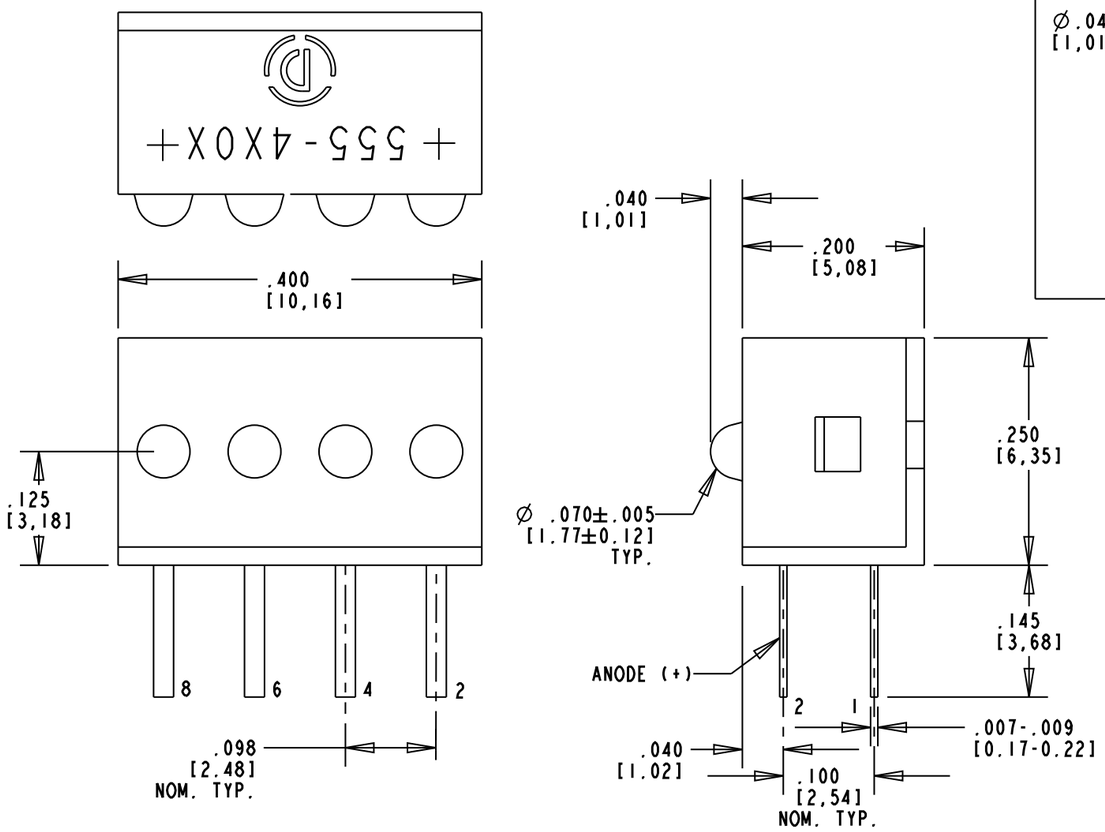

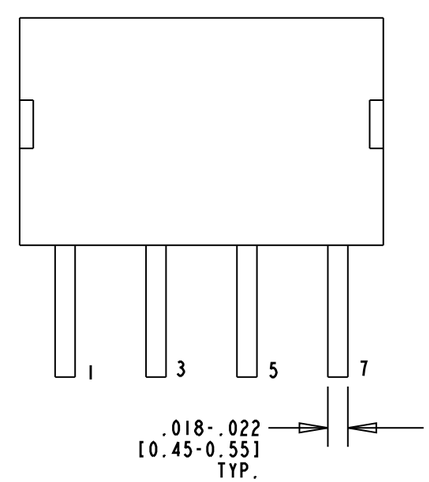

ACTUAL SIZE

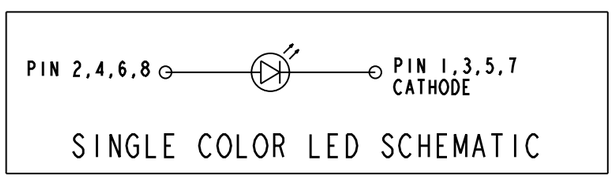

SINGLE COLOR LED SCHEMATIC

ATTENTION:
OBSERVE PRECAUTIONS FOR HANDLING ELECTROSTATIC SENSITIVE DEVICES

THIS DRAWING AND THE CONTENTS HEREIN ARE CONFIDENTIAL AND THE SOLE PROPERTY OF DIALIGHT. REPRODUCTION OF THIS DRAWING OR CONSTRUCTION OF ANY PARTS WITHIN THIS DRAWING ARE FORBIDDEN WITHOUT THE WRITTEN CONSENT OF DIALIGHT.

SCALE: DRAWING SCALE
ALL DIM'S IN: INCHES (MM)
TOLERANCES: UNLESS OTHERWISE SPECIFIED
FRACTIONS: ±1/64
DECIMALS (.XX): ±.02
DECIMALS (.XXX): ±.010
ANGLES: ±1°
FINISH:
FSCM 83330

DRAWING NUMBER: C-17763
REV: A
TITLE: 2mm QUAD CBI, RIGHT ANGLE RoHS COMPLIANT
MATERIAL

Dialight
1501 ROUTE 34 SOUTH
FARMINGDALE, NJ 07727

SHEET 1 OF 1
FAMILY TABLE: