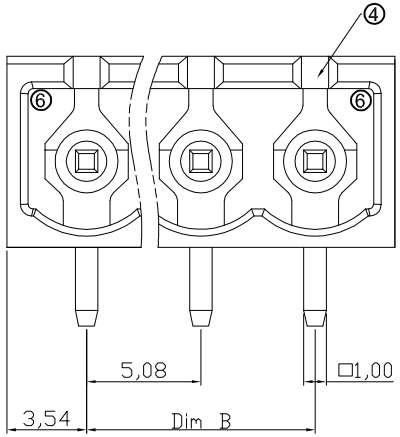

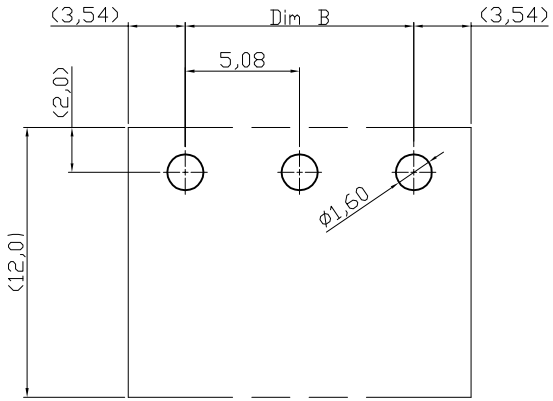

Recommended PCB LAYOUT

Material

Item ⓐ Male contact pin:Copper Tin plated
Item ⓑ Terminal housing: Thermoplastic (UL94V-0)
A-TB508-OQxxCH: Green(RAL6018/T)
③A-TB508-OQxxCH-BK: Black(RAL9005)

Electrical cULus/VDE/TUV

Voltage rating: 300VAC/300VAC/300VAC
Current rating: 20A/20A/20A
Withstanding Voltage: 1.6KV/2.5KV/2.5KV
Operating temperature: -40°C to +115°C
Soldering temperature: 250°C±10°C/5 Sec
Safety Approval:

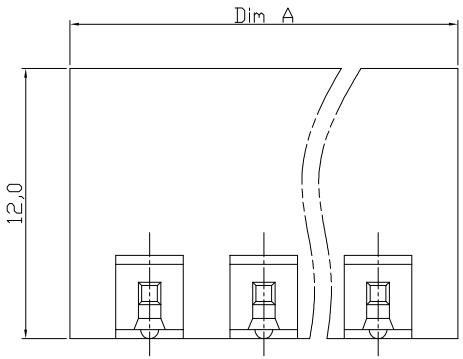

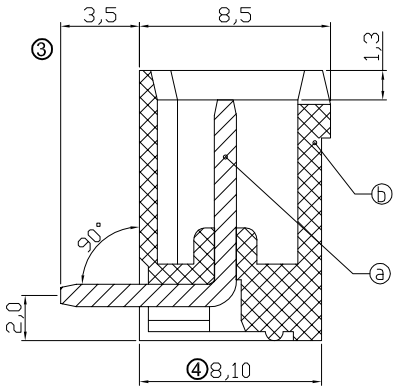

④ DIMENSION

A	Nx5.08+2.0
B	(N-1)x5.08

N=number of poles

Poles	Tol(DIMA)	Tol(DIMB)
2-6P	±0.15	±0.15
7-12P	±0.25	±0.25
13-18P	±0.30	±0.30
19-24P	±0.40	±0.40

RoHS compliant
Unit: mm

⑤ File No.: E349947

Scale	Free
TOLERANCE	
X.	±0.50
X.X	±0.30
X.XX	±0.10
DIM	TOL
X.°	±1°
Angle	TOL

Id.	Modification	Date	Name
⑥	Update to correct style	04.11.2016	Amy
⑤	Add the UL File No.	07.04.2016	Winnie
④	Update the design	12.02.2015	Amy
③	Update	18.10.2011	Lucas
②	Update	10.12.2009	Dean
①	Drawn	29.07.2009	Dean

	Date	Name
Drawn	29.07.2009	Dean
Approved	04.11.2016	Winnie

ASSMANN WSW components

Customer-No.

ASSMANN WSW-No.
③ A-TB508-OQxxCH
A-TB508-OQxxCH-BK

Drawing-No. ASS 3602 CO rev06

Replace Sheet

SV3173