THIS DRAWING IS UNPUBLISHED. RELEASED FOR PUBLICATION – ,N/A .
© COPYRIGHT N/A BY TYCO ELECTRONICS CORPORATION. ALL RIGHTS RESERVED.

LOC	DIST
DF	SO

REVISIONS

P	LTR	DESCRIPTION	DATE	DWN	APVD
	V	REV PER ECO-05-002357	08-05	AA	DE

PART NO.	A (2)	B	REMARKS
846290-1	12.00 [304.8]	.38 [9.7]	(4)
846290-2	16.00 [406.4]	.38 [9.7]	(4)
846290-3	24.00 [609.6]	.38 [9.7]	(4)
846290-4	48.00 [1219.2]	.38 [9.7]	(4)
846290-5	39.00 [990.6]	.38 [9.7]	(4)
846290-6	36.00 [914.4]	.38 [9.7]	(4)
846290-7	15.75 [400.0]	–	(4)
846290-8	72.00 [1828.8]	.38 [9.7]	(4)
846290-9	60.00 [1524.0]	.38 [9.7]	(4)
1-846290-0	84.00 [2133.6]	.38 [9.7]	(4)
1-846290-1	96.00 [2438.4]	.38 [9.7]	(4)
1-846290-2	56.00 [1422.4]	.38 [9.7]	(4)
1-846290-3	600.00 [15240.0]	.38 [9.7]	(4)
1-846290-4	20.00 [508.0]	.38 [9.7]	(4)
1-846290-5	30.00 [762.0]	.38 [9.7]	(4)
1-846290-6	18.00 [457.2]	.38 [9.7]	(4)
1-846290-7	6.00 [152.4]	.38 [9.7]	(4)
1-846290-8	7.00 [177.8]	.38 [9.7]	(4)
1-846290-9	8.50 [215.9]	.38 [9.7]	(4)
2-846290-0	16.50 [419.1]	.38 [9.7]	(4)
2-846290-1	9.00 [228.6]	.38 [9.7]	(4)
2-846290-2	10.00 [254.0]	.38 [9.7]	(4)
2-846290-3	21.00 [533.4]	.38 [9.7]	(4)
2-846290-4	32.00 [812.8]	.38 [9.7]	(4)
2-846290-5	28.00 [711.2]	.38 [9.7]	(4)
2-846290-6	82.00 [2082.8]	.38 [9.7]	(4)
2-846290-7	76.00 [1930.4]	.38 [9.7]	(4)
2-846290-8	120.00 [3048.0]	.38 [9.7]	(4)
2-846290-9	54.00 [1371.6]	.38 [9.7]	(4)
3-846290-0	78.75 [2000.2]	.38 [9.7]	(4)
3-846290-1	32.50 [825.5]	.38 [9.7]	(4)
3-846290-2	394.00 [10007.6]	.38 [9.7]	(4)
3-846290-3	50.00 [1270.0]	.38 [9.7]	(4)
3-846290-4	787.00 [19989.8]	.38 [9.7]	(4)
3-846290-5	39.38 [1000.3]	.38 [9.7]	(4)
3-846290-6	27.00 [685.8]	.38 [9.7]	(4)
3-846290-7	198.00 [5029.2]	.38 [9.7]	(4)
3-846290-8	32.00 [812.8]	.38 [9.7]	(4)
3-936566-9	40.00 [1016.0]	.38 [9.7]	(4)
4-846290-0	315.00 [8001.0]	.38 [9.7]	(4)
4-846290-1	1181.00 [29997.4]	.38 [9.7]	(4)
4-846290-2	65.00 [1651.0]	.38 [9.7]	(4)
4-846290-3	87.00 [2209.8]	.38 [9.7]	(4)
4-846290-4	48.00 [1219.2]	.38 [9.7]	(4)
5-846290-1	12.00 [304.8]	.38 [9.7]	(6)
5-846290-3	24.00 [609.6]	.38 [9.7]	(6)
5-846290-4	48.00 [1219.2]	.38 [9.7]	(6)
5-846290-6	36.00 [914.4]	.38 [9.7]	(6)
5-846290-7	15.75 [400.0]	–	(6)
6-846290-2	56.00 [1422.4]	.38 [9.7]	(6)
6-846290-4	20.00 [508.0]	.38 [9.7]	(6)
6-846290-5	30.00 [762.0]	.38 [9.7]	(6)
6-846290-6	18.00 [457.2]	.38 [9.7]	(6)
7-846290-0	16.50 [419.1]	.38 [9.7]	(6)
7-846290-6	82.00 [2082.8]	.38 [9.7]	(6)
7-846290-8	120.00 [3048.0]	.38 [9.7]	(6)
8-846290-7	198.00 [5029.2]	.38 [9.7]	(6)
9-846290-0	315.00 [8001.0]	.38 [9.7]	(6)
9-846290-1	1181.00 [29997.4]	.38 [9.7]	(6)
9-846290-4	48.00 [1219.2]	.38 [9.7]	(6)

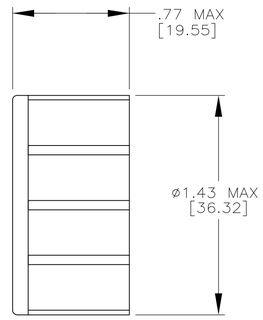

4-846290-2 & 4-846290-4
ONLY

1. MARKED PER MIL-STD-130.
2. TOLERANCE OF LEAD LENGTH:
   UP TO 24 INCHES [609.6] = ±.12 [3.0]
   24 INCHES [609.6] & UP = 1%
3. OPERATING VOLTAGE: 50 KVDC AT 0 TO 70,000 FEET, -55°C TO 125°C.
4. WHERE APPLICABLE "B" LENGTH IS SOLDER DIPPED.
5. TO MATE WITH WITH AMP LGH-4 RECEPTACLE WITH 2.00 [50.80] BARREL DEPTH.
6. INSULATION CUT, BUT NOT REMOVED.

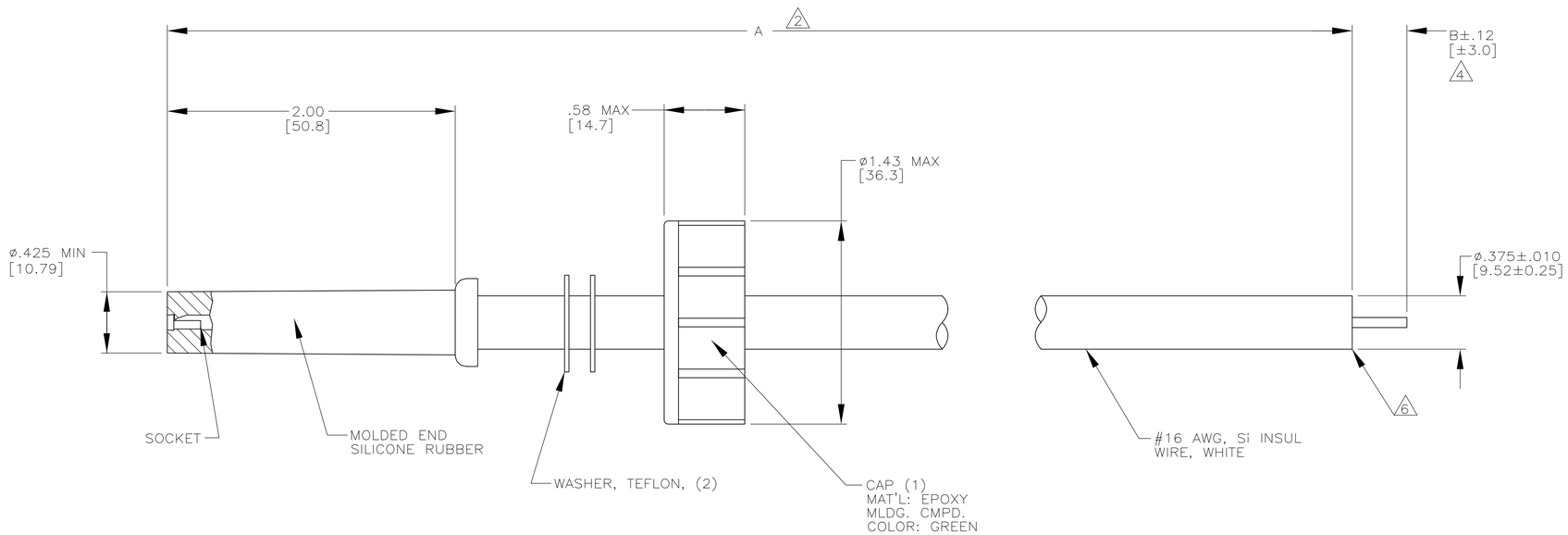

THIS DRAWING IS A CONTROLLED DOCUMENT.

DIMENSIONS: INCHES [mm]

TOLERANCES UNLESS OTHERWISE SPECIFIED:
0 PLC ± –
1 PLC ± –
2 PLC ± .02 [0.5]
3 PLC ± –
4 PLC ± –
ANGLES ± –

MATERIAL: SEE CALLOUTS
FINISH: –

DWN 11-DEC-89 C.C.THOMAS
CHK 19-DEC-89 S.GLATFELTER
APVD 19-DEC-89 G.SCHEFFER
PRODUCT SPEC —
APPLICATION SPEC —
WEIGHT —

tyco Electronics
Tyco Electronics Corporation
Harrisburg, Pa 17105-3608

NAME: LEAD ASSY SGL END LGH-4

SIZE	CAGE CODE	DRAWING NO	RESTRICTED TO
A1	00779	C-846290	—

CUSTOMER DRAWING | SCALE 2:1 | SHEET 1 OF 1 | REV V