REV.	REMARK	DATE	SIGN.

MATERIAL:
CONTACT PIN: PHOSPHOR BRONZE SELECTIVE 10u" GOLD OVER NICKEL PLATED.
GROUND PIN: COPPER WIRE, TIN PLATED
METAL BODY: ZINC DIE CASTING, NICKEL PLATED
MAIN BODY: VALOX, UL94V-0
CENTER PLASTIC: POLYPROLYLENE, UL94V-0
SPRING CLIP: PHOSPHOR BRONZE, TIN PLATED

ELECTRICAL:
OPERATING VOLTAGE: 500 VOLTS RMS
CONTACT RESISTANCE: 3.0 MILLIOHMS MAX. (GOLD)
FREQUENCY RANGE: 0~1 GHZ
DIELECTRIC WITHSTANDING VOLTAGE: 1500 VOLTS (VAC)
INSULATION RESISTANCE: 5000 MEGAOHMS MIN.
IMPEDANCE NOM.: 50 OHM
TEMPERATURE RANGE: -55°C TO +105°C

MECHANICAL:
DURABILITY: 500 CYCLES

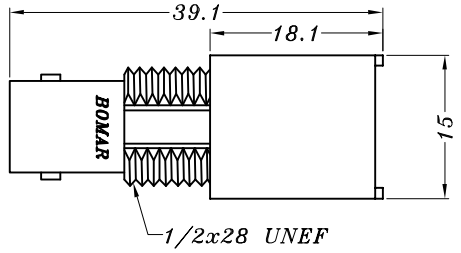

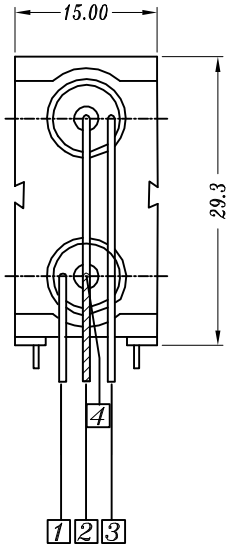

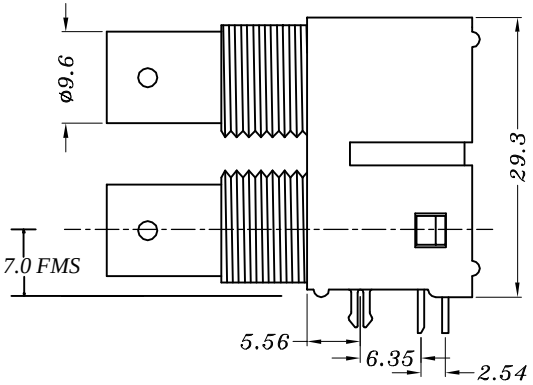

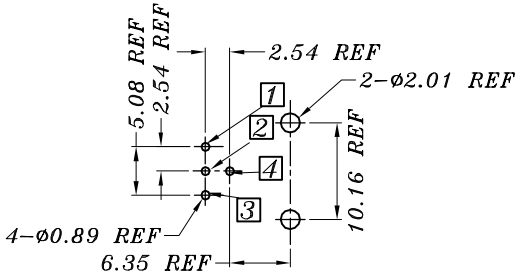

(DIMENSIONING)
PCB HOLE CONFIGURATION

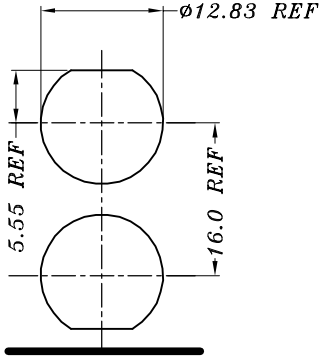

PANEL CUTOUT

Bomar Interconnect	DESC.	DUAL BNC RIGHT ANGLE 50 OHM		APPROVED	CHECKED	DESIGNED	TOLERANCE	SCALE	1 = 1	UNIT	mm
	P/N	364A2595	CUSTOMER P/N	BB	SO	BB		DATE	09/03/03	DWG NO:	UDBN\R01A13B