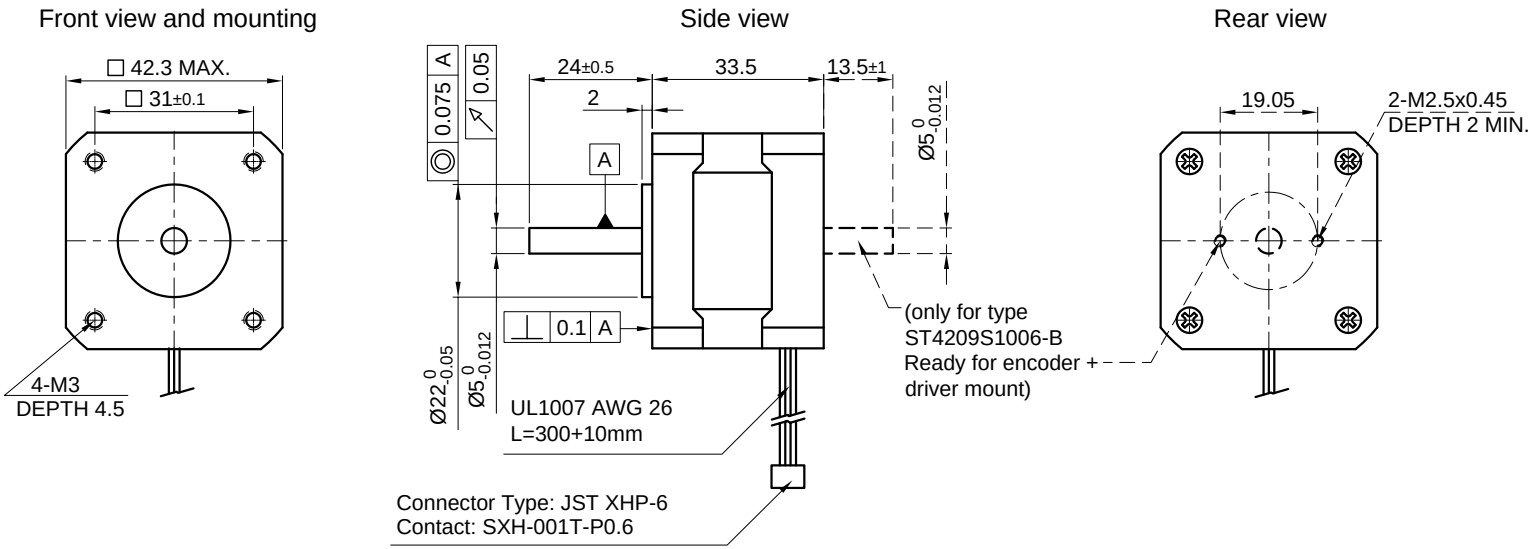


| SPECIFICATION \ CONNECTION | UNIPOLAR OR BIPOLAR-1 WINDING | BIPOLAR SERIAL |
|---|---|---|
| VOLTAGE (VDC) | 4.0 | 5.63 |
| AMPS/PHASE | 0.95 | 0.67 |
| RESISTANCE/PHASE (Ohms)@25°C | 4.2±15% | 8.4±15% |
| INDUCTANCE/PHASE (mH) @1KHz | 4.0±20% | 16±20% |
| HOLDING TORQUE (Nm) [lb-in] | 0.15 [1.328] | 0.212 [1.876] |
| DETENT TORQUE (Nm) [lb-in] | $4.5\times10^{-3}$ [0.0398] | |
| STEP ANGLE (°) | 0.9 | |
| STEP ACCURACY (NON-ACCUM) | ±5% | |
| ROTOR INERTIA (Kg-m²) [lb-in²] | $3.5\times10^{-6}$ [0.012] | |
| WEIGHT (Kg) [lb] | 0.22 [0.485] | |

TEMPERATURE RISE: MAX.80°C (MOTOR STANDSTILL; FOR 2 PHASE ENERGIZED)
AMBIENT TEMPERATURE -10°~ 50°C [14°F ~ 122°F]
INSULATION RESISTANCE 100 MOhm (UNDER NORMAL TEMPERATURE AND HUMIDITY)
INSULATION CLASS B 130° [266°F]
DIELECTRIC STRENGTH 500VAC FOR 1 MIN. (BETWEEN THE MOTOR COILS AND THE MOTOR CASE)
AMBIENT HUMIDITY MAX. 85% (NO CONDENSATION)

## PERMISSIBLE RADIAL+AXIAL FORCE

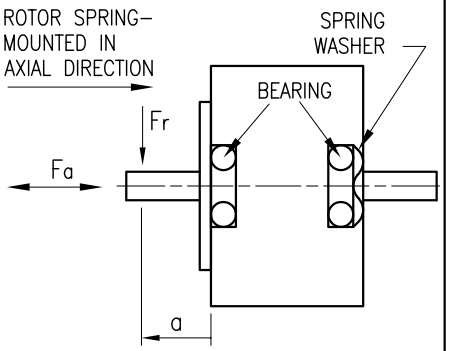


| AXIAL-FORCE Fa (N) | Fa=7 | | | |
|---|---|---|---|---|
| DISTANCE a (mm) | 5 | 10 | 15 | 20 |
| RADIAL-FORCE Fr (N) | 58 | 36 | 26 | 20 |

| | AXIAL | RADIAL |
|---|---|---|
| SHAFT PLAY (mm) | 0.075 | 0.025 |
| AT LOAD MAX: (N) | 10 | 5.0 |

| TYPE OF CONNECTION (EXTERN) | | | MOTOR | | |
|---|---|---|---|---|---|
| UNIPOLAR | BIPOLAR 1WINDING | BIPOLAR SERIAL | CONNECTOR PIN NO. | LEADS | WINDING |
| A | A | A | 1 | BRN | A |
| COM | COM | | 5 | BLK | COM |
| A\ | | A\ | 3 | ORG | A\ |
| B | B | B | 2 | RED | B |
| COM | COM | | 6 | WHT | COM |
| B\ | | B\ | 4 | YEL | B\ |

for >speed
for <speed

FULL STEP 2 PHASE-Ex.,
WHEN FACING MOUNTING END (X)

| STEP | A | B | A\ | B\ | | CCW |
|---|---|---|---|---|---|---|
| 1 | + | + | − | − | | |
| 2 | − | + | + | − | | |
| 3 | − | − | + | + | | |
| 4 | + | − | − | + | CW | |

WIRING DIAGRAM

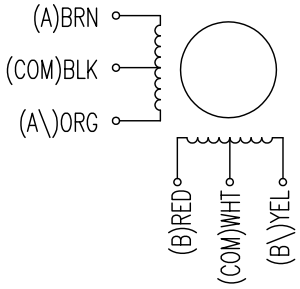


| REV | DESCRIPTION | DATE | APVD |
|---|---|---|---|
| | | | |
| | | | |
| | | | |

NANOTEC:

ST4209S1006

| SCALE FREE | | APVD | S.Ha. | 26.02.07 |
|---|---|---|---|---|
| X | ±0.5 | CHKD | | |
| 1PL | ±0.2 | DRN | J.W. | 29.06.06 |
| 2PL | ±0.1 | SIGNATURE | | DATE |
| ANGLE | ±30' | | | |

STEPPING MOTOR

DWG.NO

ST4209S1006