THIS DRAWING IS UNPUBLISHED. RELEASED FOR PUBLICATION ,19 .
© COPYRIGHT 19 BY AMP INCORPORATED. ALL RIGHTS RESERVED.

LOC	DIST
CE	16

REVISIONS

P	LTR	DESCRIPTION	DATE	DWN	APVD
	J	REVISED PER 0A00-0314-99	16APR01	TA	SB

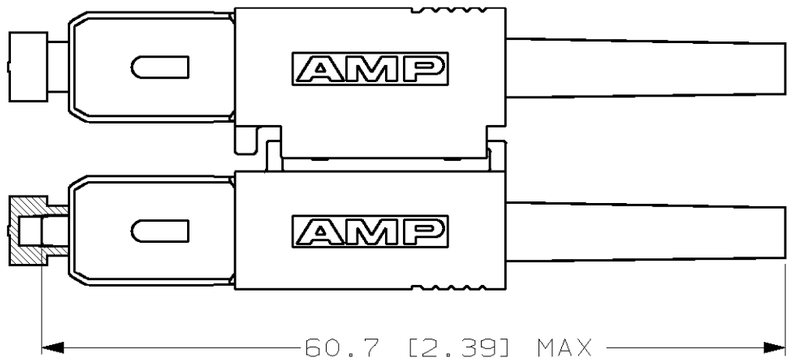

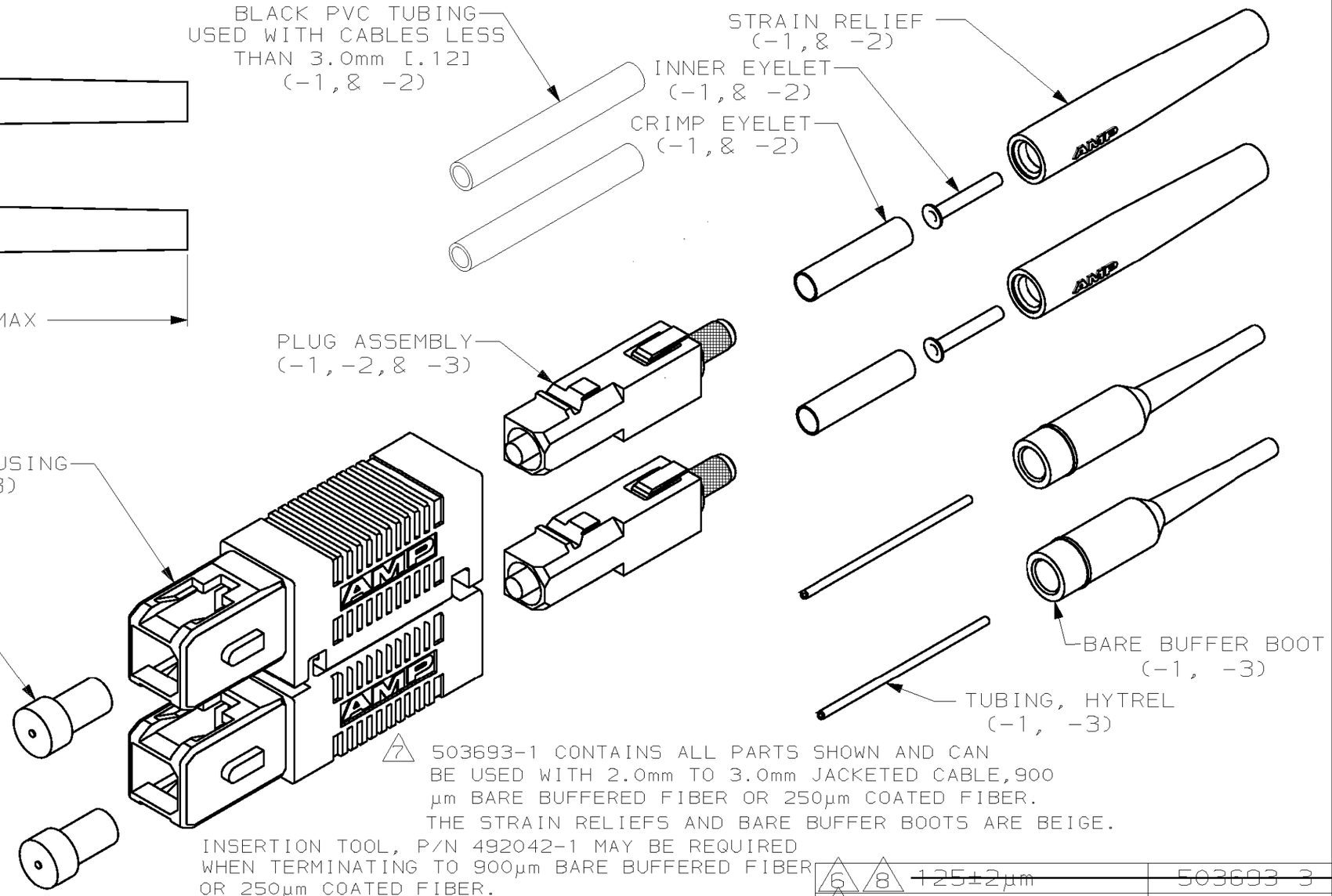

1. MATERIAL:
   - PLUG BODY: THERMOPLASTIC, BEIGE
   - CLIP HOUSING: THERMOPLASTIC, BEIGE
   - INTERNAL BODY: BRASS
   - CRIMP EYELET: COPPER
   - INNER EYELET: BRASS
   - STRAIN RELIEF/BOOT: THERMOPLASTIC ELASTOMER, BEIGE
   - CAPILLARY: ZrO_2
2. FINISH:
   - INTERNAL BODY: ELECTROLESS NICKEL
   - CRIMP EYELET: TIN
3. DIMENSIONS IN [ ] ARE IN INCHES.
4. INSTRUCTION SHEET #408-4066
5. SAME AS 503693-1 EXCEPT THERE IS NO HYTREL TUBING NOR BARE BUFFER BOOT AND ONE STRAIN RELIEF IS BEIGE AND THE OTHER IS BLUE. KIT IS FOR USE WITH 2.0mm TO 3.0mm JACKETED CABLE.
6. FOR 250/900µm APPLICATION, TERMINATION MAY REQUIRE USE OF INSERTION TOOL P/N 492042-1.
7. 503693-1 CONTAINS ALL PARTS SHOWN AND CAN BE USED WITH 2.0mm TO 3.0mm JACKETED CABLE, 900 µm BARE BUFFERED FIBER OR 250µm COATED FIBER. THE STRAIN RELIEFS AND BARE BUFFER BOOTS ARE BEIGE.

INSERTION TOOL, P/N 492042-1 MAY BE REQUIRED WHEN TERMINATING TO 900µm BARE BUFFERED FIBER OR 250µm COATED FIBER.

8. PART NUMBER 503693-3 IS SUPERCEDED BY 503693-1.

FIBER SIZE	PART NO
~~125±2µm~~ (6, 8)	~~503693-3~~
125±2µm (5)	503693-2
125±2µm (7)	503693-1

THIS DRAWING IS A CONTROLLED DOCUMENT FOR AMP INCORPORATED. IT IS SUBJECT TO CHANGE AND THE CONTROLLING ENGINEERING ORGANIZATION SHOULD BE CONTACTED FOR THE LATEST REVISION.

DIMENSIONS: mm

TOLERANCES UNLESS OTHERWISE SPECIFIED:

0 PLC	±
1 PLC	±
2 PLC	±0.13[.005]
3 PLC	±
4 PLC	±
ANGLES	±1°

MATERIAL 1 5

FINISH 2

DWN	D ERDMAN	6-27-94
CHK	J MCKEE	6-27-94
APVD	B EDWARDS	6-27-94
PRODUCT SPEC	–	
APPLICATION SPEC	–	
WEIGHT	–	

CUSTOMER DRAWING

AMP Incorporated
Harrisburg, PA 17105-3608

NAME: KIT, CONNECTOR, AMP LightCrimp SC DUPLEX, MULTIMODE

SIZE	CAGE CODE	DRAWING NO
A3	00779	C-503693

SCALE	SHEET	REV
2:1	1 OF 1	J

AMP1470-19 REV 10/93