THIS DRAWING IS UNPUBLISHED. RELEASED FOR PUBLICATION -,- .
© COPYRIGHT - By - ALL RIGHTS RESERVED.

LOC	DIST
—	—

REVISIONS

P	LTR	DESCRIPTION	DATE	DWN	APVD
	AD3	ADDITION OF NOTE 7, TEXT "MAX" TO DIM 21.0 IN ZONE D2 AND TEXT "REF" DIM 2.1, 2.2, 2.8, & 2.2 IN ZONE B4 & B3.	21JULY2015	TJ	PS

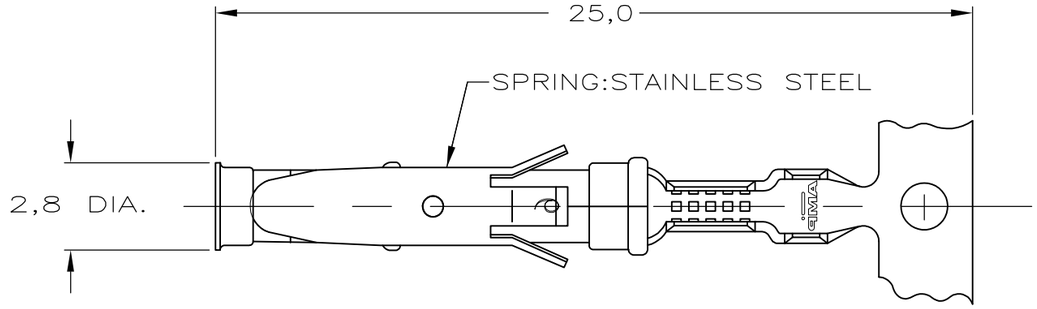

STRIP

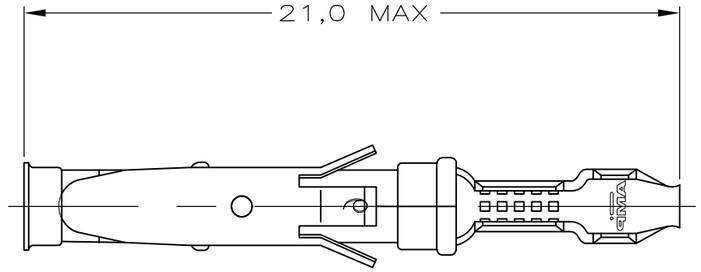

LOOSE-PIECE

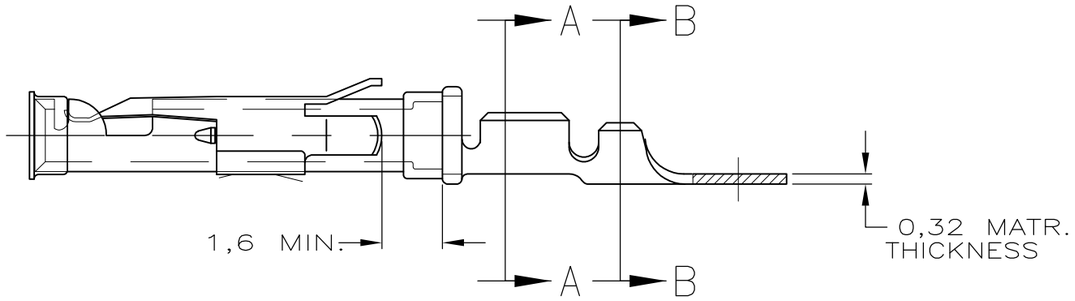

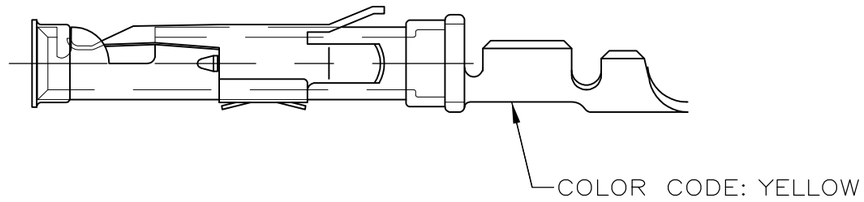

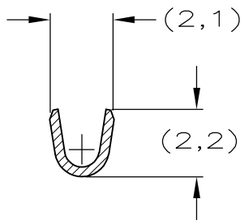

SECTION A-A

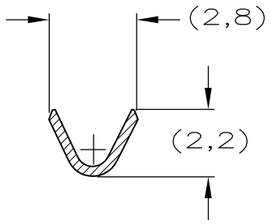

SECTION B-B

WIRE RANGE : 0,2-0,50 mm ² (24-20 AWG)
INSUL. RANGE : 1,1 -1,8 mm (.080-.100)

TERMINAL "U" UP.
AMPOMATOR + MINI-APPL. 107-3-FIG.1 (A)
107-3-FIG.2 (B)

TERMINAL "U" DOWN.
107-3-FIG.4 (C)

	PART NUMBER	DIRECTION OF REEL	LOOSE-PIECE	MATERIAL	PLATING
	1-163087-5	A	6 1-163088-4	BRASS	SILVER 28
	1-163087-4	A	6 1-163088-4	BRASS	EL.TIN 31 20
5 OBSOLETE	1-163087-3	A	6 1-163088-3	BRASS	BR.TIN/LEAD 30
5 OBSOLETE	4 5-163087-3	C		BRASS	ECON.GOLD 21
	1 4 5-163087-2	C		BRASS	SEL.GOLD 22
5 OBSOLETE	1 4 5-163087-1	C		BRASS	EL.TIN 20
	1-163087-2	B	6 1-163088-1	BRASS	GOLD 23
	1-163087-1	A		BRASS	ECON.GOLD 21
	1-163087-0	B	1-163088-0	BRASS	ECON.GOLD 21
	163087-9	A		BRASS	EL.TIN 20
	163087-8	A		BRASS	SEL.GOLD 22
	1 163087-2	B	163088-1	BRASS	SEL.GOLD 22
	1 163087-1	B	163088-1	BRASS	EL.TIN 20

NOTES :

1. UL RECOGNIZED UNDER E28476 VOL VI SEC I
2. FOR CRIMP DETAILS SEE SPEC. 114-19000
3. MEETS PRODUCT SPECIFICATION 108-10042
4. SPECIAL REEL WITH 200PCS FOR REEL-FED HAND-TOOL
5. OBSOLETE PARTS: OBSOLETE CIS STREAMLINING PER D.RENAUD/D.SINISI
6. OBSOLETE
7. OMISSION OF 6 CONTACTS MAX PER REEL OF 5000PCS
31. LUBRICATED

NOTES	MATERIAL	THICKNESS	AREA
20	TIN	2,0 µm	ALL OVER
21	NICKEL GOLD TIN	0,8 µm	ALL OVER CONTACT AREA BARREL
22	NICKEL GOLD GOLD	0,8 µm	ALL OVER CONTACT AREA ALL OVER
23	NICKEL GOLD GOLD	1,2 µm	ALL OVER CONTACT AREA ALL OVER
27	NICKEL SILVER TIN	2,5 µm	ALL OVER CONTACT AREA BARREL
28	SILVER NICKEL	1,5-2,5µm 0,76 µm	ALL OVER
29	SILVER	2,5 µm	ALL OVER
30	NICKEL BR TIN	1,27 µm 1,27 µm	ALL OVER ALL OVER

THIS DRAWING IS A CONTROLLED DOCUMENT.

DIMENSIONS: mm

TOLERANCES UNLESS OTHERWISE SPECIFIED:
0 PLC ± -
1 PLC ± -
2 PLC ± -
3 PLC ± -
4 PLC ± -
ANGLES ± -

MATERIAL: REFER TABLE
FINISH: REFER TABLE

DWN M THAJUDEEN 21JULY2015
CHK GANI NIMBENNAPPA 21JULY2015
APVD PRASHANTH S 21JULY2015
PRODUCT SPEC 108-10042
APPLICATION SPEC 114-19000
WEIGHT —

TE Connectivity

NAME: TYPE III+, SIZE 16, SOCKET ASS'Y, 24-20 AWG, 1.1-1.8mm DIA INSULATION

SIZE	CAGE CODE	DRAWING NO	RESTRICTED TO
A3	00779	C-163087	—

CUSTOMER DRAWING | SCALE — | SHEET 1 OF 1 | REV AD3