THIS DRAWING IS UNPUBLISHED. RELEASED FOR PUBLICATION -.- .
© COPYRIGHT - BY TYCO ELECTRONICS CORPORATION. ALL RIGHTS RESERVED.

LOC	DIST
GP	00

REVISIONS

P	LTR	DESCRIPTION	DATE	DWN	APVD
	A	REVISED PER ECO-06-021366	06OCT06	JDP	CWR

1. POLYESTER, BLACK, UL RATED 94V-0.
2. PHOSPHOR BRONZE PER QQ-B-750.
3. 0.38µm [.000015] MIN GOLD ON LOCALIZED GOLD PLATE AREA, 1.27µm [.000050] MIN TIN ON TERMINATION END, ALL OVER 1.27µm [.000050] MIN NICKEL ON ENTIRE CONTACT.

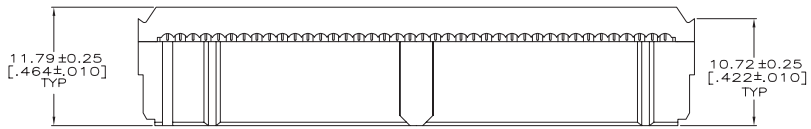

TERMINATED VIEW

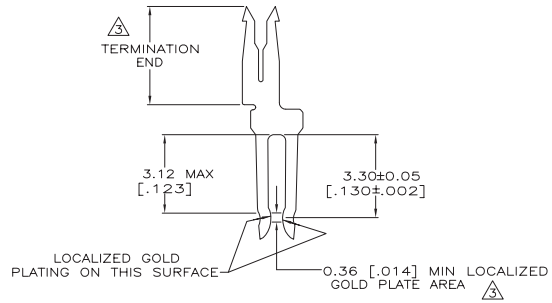

DETAIL Z
SCALE 10:1
TYPICAL

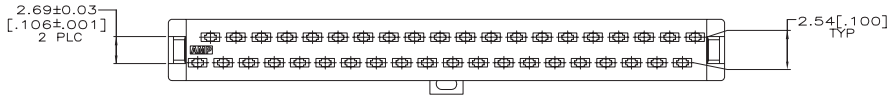

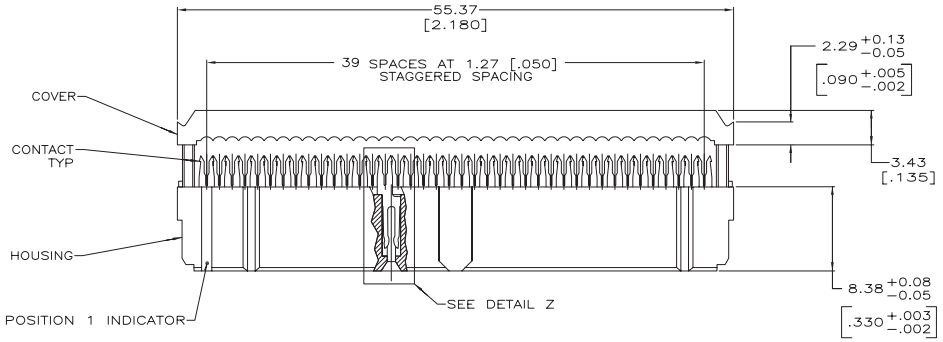

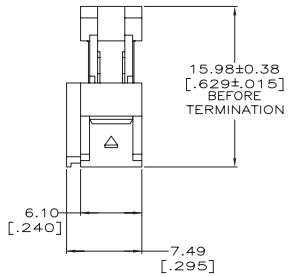

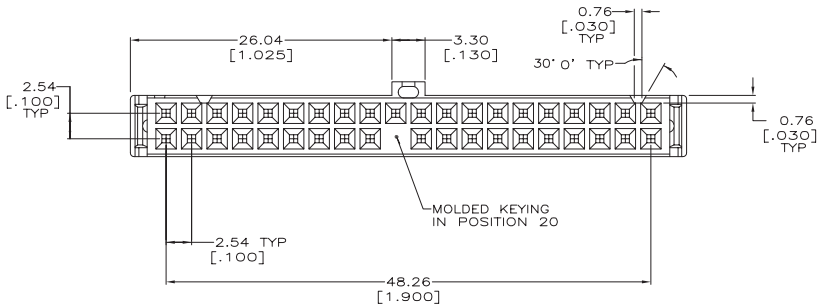

40	5111877-1
NO OF POSN	PART NUMBER

THIS DRAWING IS A CONTROLLED DOCUMENT.

DIMENSIONS: mm [INCHES]

TOLERANCES UNLESS OTHERWISE SPECIFIED:
0 PLC ± –
1 PLC ± –
2 PLC ± 0.13 [.005]
3 PLC ± –
4 PLC ± –
ANGLES ± 0°30'

MATERIAL MOLDED PARTS: 1
CONTACTS: 2
FINISH CONTACTS: 3

DWN B. MCMASTER 10JUNE04
CHK R.STONE 10JUNE04
APVD M. WALMSLEY 10JUNE04
PRODUCT SPEC 108-40000
APPLICATION SPEC 114-40005
WEIGHT –
CUSTOMER DRAWING

Tyco Electronics Corporation
Harrisburg, PA 17105-3608

NAME: RECEPTACLE KIT, FULL COVER, CENTER & MILITARY POLARIZATION, NOVO, AMP-LATCH

SIZE	CAGE CODE	DRAWING NO	RESTRICTED TO
A1	00779	C-5111877	–

SCALE 4:1 SHEET 1 OF 1 REV A