THIS DRAWING IS UNPUBLISHED. RELEASED FOR PUBLICATION -,- .
© COPYRIGHT - BY TYCO ELECTRONICS CORPORATION. ALL RIGHTS RESERVED.

LOC	DIST
FT	0

REVISIONS

P	LTR	DESCRIPTION	DATE	DWN	APVD
	E	REVISED PER ECO-07-024895	10/22/07	SS	GS
	E1	REVISED PER ECO-09-020689	27AUG09	KK	AEG

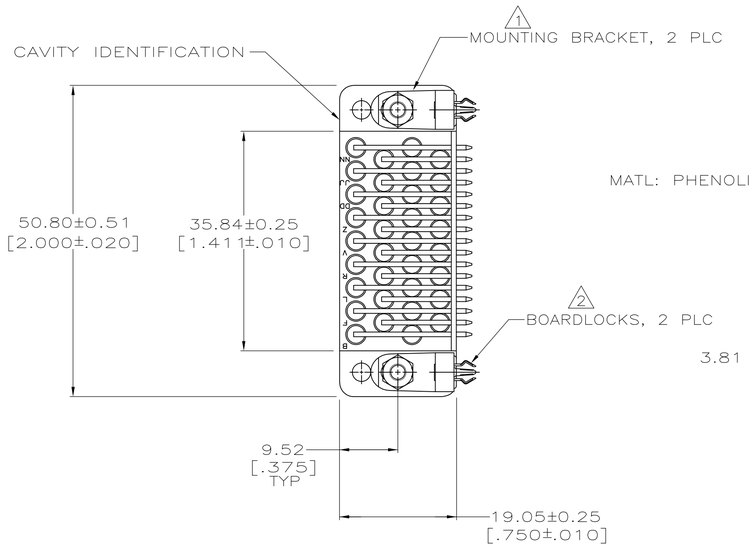

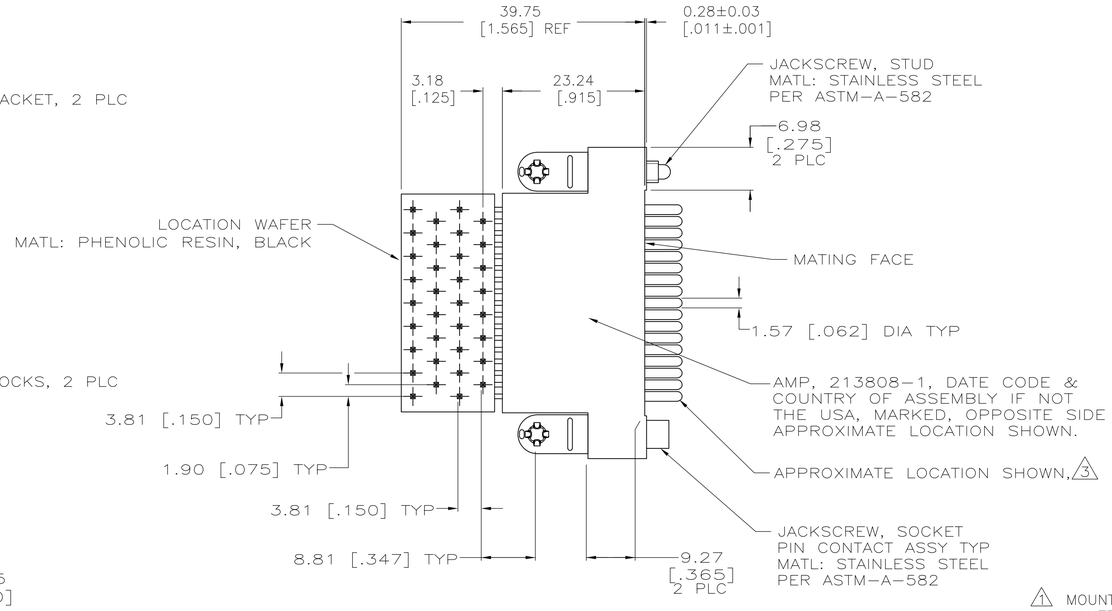

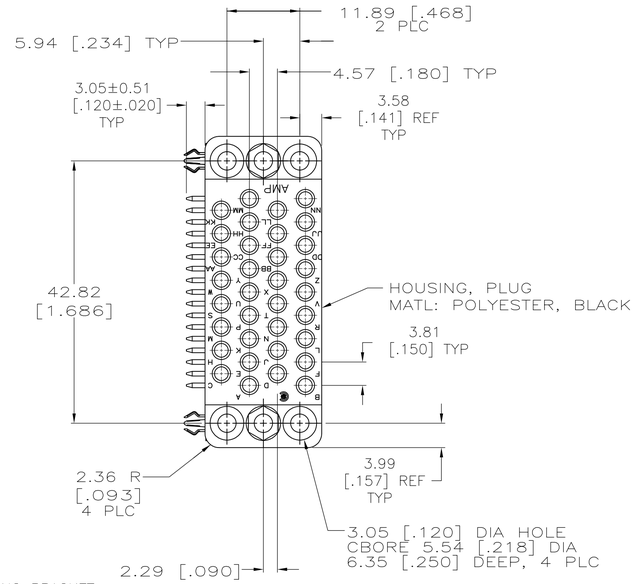

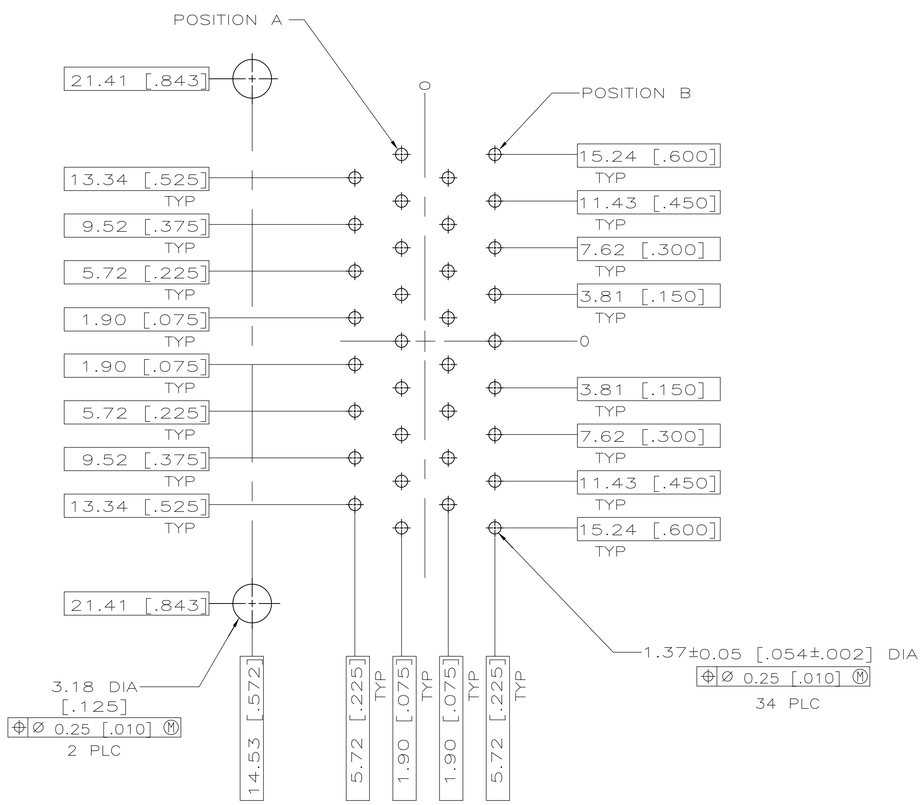

RECOMMENDED PC BOARD LAYOUT
SCALE 4:1

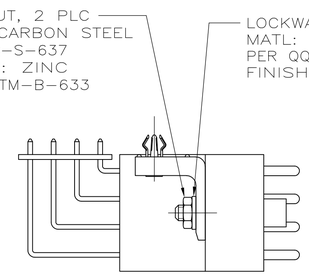

1 MOUNTING BRACKET:
MATERIAL: ZINC PER QQ-Z-363.
FINISH: 3.81um [.000150] MIN NICKEL PER QQ-N-290 OVER 2.54um [.000100] MIN COPPER PER MIL-C-14550.

2 BOARDLOCK:
MATERIAL: COPPER ALLOY PER ASTM-B-592.
FINISH: 5.08um [.000200] MIN TIN-LEAD PER MIL-T-10727 OVER 1.27um[.000050] MIN NICKEL PER QQ-N-290.

3 PIN CONTACT ASSEMBLY:
BODY MATERIAL: BRASS PER MIL-C-50.
FINISH: 0.76um [.000030] MIN GOLD PER MIL-G-45204 FOR A LENGTH OF 5.08 [.200] MIN FROM MATING END, 2.54um [.000100] MIN TIN-LEAD PER MIL-T-10727 FOR A LENGTH OF 6.35 [.250] MIN FROM OPPOSITE END, BOTH OVER 1.27um [.000050] MIN NICKEL PER QQ-N-290.
SPRING-MATERIAL: STAINLESS STEEL PER QQ-S-766.
POST-MATERIAL: BRASS PER ASTM-B-134.
FINISH: 2.54um [.000100] MIN TIN-LEAD PER MIL-T-10727 OVER 1.27um[.000050] MIN NICKEL PER QQ-N-290.

4 PIN CONTACT ASSEMBLIES ARE SELECTIVELY LOADED INTO HOUSING AND LOCATION WAFER AT CIRCUITS A,B,C,D,E,F,H,K,P,R,S,T,U,V,W,X,Y AND AA. NO HARDWARE IS SUPPLIED.

5 PIN CONTACT ASSEMBLY:
BODY MATERIAL: BRASS PER MIL-C-50.
FINISH: 0.76um [.000030] MIN GOLD PER MIL-G-45204 FOR A LENGTH OF 5.08 [.200] MIN FROM MATING END, 2.54um [.000100] MIN TIN PER MIL-T-10727 FOR A LENGTH OF 6.35 [.250] MIN FROM OPPOSITE END, BOTH OVER 1.27um [.000050] MIN NICKEL PER QQ-N-290.
SPRING-MATERIAL: STAINLESS STEEL PER QQ-S-766.
POST-MATERIAL: BRASS PER ASTM-B-134.
FINISH: 2.54um [.000100] MIN TIN PER MIL-T-10727 OVER 1.27um[.000050] MIN NICKEL PER QQ-N-290.

6 BOARDLOCK:
MATERIAL: COPPER ALLOY PER ASTM-B-592.
FINISH: 5.08um [.000200] MIN TIN PER MIL-T-10727 OVER 1.27um[.000050] MIN NICKEL PER QQ-N-290.

7 OBSOLETE PARTS: OBSOLETE CIS STREAMLINING PER D.RENAUD/D.SINISI

	CONTACT & POST PLATING	BOARDLOCK PLATING	PART NUMBER
7 OBSOLETE	5	–	213808-4
	5	6	213808-3
7 OBSOLETE	3	–	4 213808-2
7 SUPERSEDED	3	2	213808-1

THIS DRAWING IS A CONTROLLED DOCUMENT.

DIMENSIONS: mm [INCHES]

TOLERANCES UNLESS OTHERWISE SPECIFIED:
0 PLC ± –
1 PLC ± –
2 PLC ± 0.13 [.005]
3 PLC ± –
4 PLC ± –
ANGLES ± –

MATERIAL: SEE CALLOUTS
FINISH: SEE CALLOUTS

DWN D.BROCKWAY 08-22-94
CHK R.STONE 09-08-94
APVD –
PRODUCT SPEC –
APPLICATION SPEC –
WEIGHT –

Tyco Electronics
Tyco Electronics Corporation
Harrisburg, Pa 17105-3608

NAME: CONNECTOR ASSEMBLY, PIN, 34 POSITION, RIGHT ANGLE, M SERIES

SIZE	CAGE CODE	DRAWING NO	RESTRICTED TO
A1	00779	C-213808	–

CUSTOMER DRAWING
SCALE 2:1 SHEET 1 OF 1 REV E1