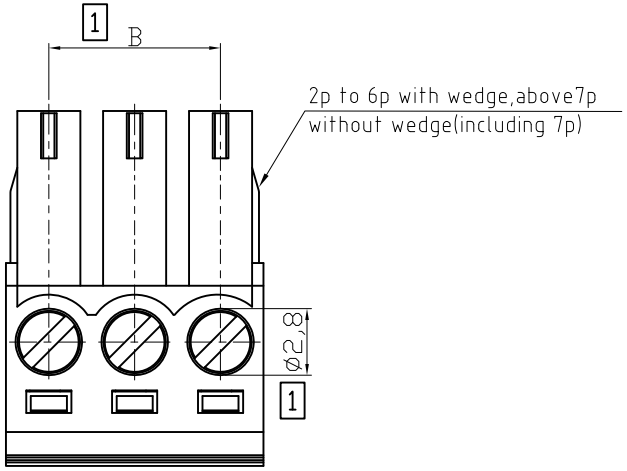


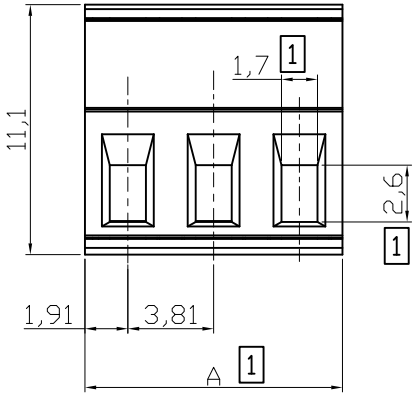


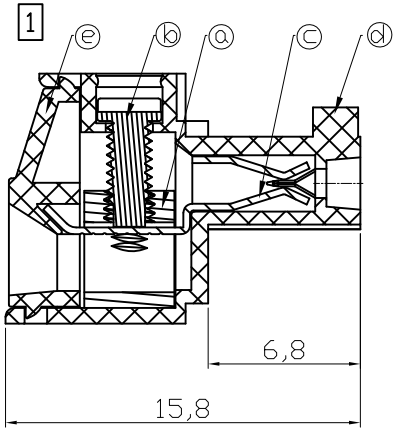


1

Material

Item ⓐ Clamp: Brass(CuZn) Ni plated
Item ⓑ Terminal screw :Steel Zinc plating"-"slot type
Item ⓒ Female contact: PhBz, Tin plated
Item ⓓ Terminal(housing): Thermoplastic (UL94V-0) Green(RAL6018/T)
Item ⓔ Terminal(cover): Thermoplastic (UL94V-0) Green(RAL6018/T)

Electrical cULus/VDE

Voltage rating: 300VAC/300VAC
Current rating: 10A/10.5A
Wire range: 1.5mm²
Solid wire(AWG): 16-28/16-28
Stranded wire(AWG): 16-28/16-28
Torque: 3Lb-In /0.2N.m
Screw: M2
Wire strip length: 6-7 mm
Withstanding Voltage: 1.6KV/2.5KV
Operating temperature: -40°C to +115°C
Safety Approval:

1

Dimension

| | |
|---|---|
| DIM A | Nx3.81 |
| DIM B | (N-1)x3.81 |

N=Number of poles

| Poles | Tolerance DIM A | Tolerance DIM B |
|---|---|---|
| 2P-6P | ±0.15 | ±0.15 |
| 7P-12P | ±0.20 | ±0.20 |
| 13P-18P | ±0.25 | ±0.25 |
| 19P-24P | ±0.30 | ±0.30 |

**RoHS compliant**
**Unit: mm**

| | |
|---|---|
| Scale | Free |
| TOLERANCE | |
| X. | ±0.50 |
| X.X | ±0.30 |
| X.XX | ±0.10 |
| DIM | TOL |
| X.° | ±1° |
| | |
| Angle | TOL |

| Id. | Modification | Date | Name |
|---|---|---|---|
| ② | Update | 06.03.2013 | Amy |
| ① | Drawn | 10.12.2009 | Dean |

| | Date | Name |
|---|---|---|
| Drawn | 10.12.2009 | Dean |
| Approved | 06.03.2013 | Amy |

ASSMANN WSW components

Customer-No.

ASSMANN WSW-No.
A-TB381-TJxxU

Drawing-No.
ASS 3832 CO

rev02

Replace

Sheet

SV3142