THIS DRAWING IS UNPUBLISHED. RELEASED FOR PUBLICATION -,- .
© COPYRIGHT - By - ALL RIGHTS RESERVED.

LOC	DIST
G	14

REVISIONS

P	LTR	DESCRIPTION	DATE	DWN	APVD
	A2	REVISED PER ECO-15-006978	06JUN2015	NK	MM

1 TONGUE THK IS 1.80±0.06.

2 TIN PLATE PER ASTM B545 ANNEALED.

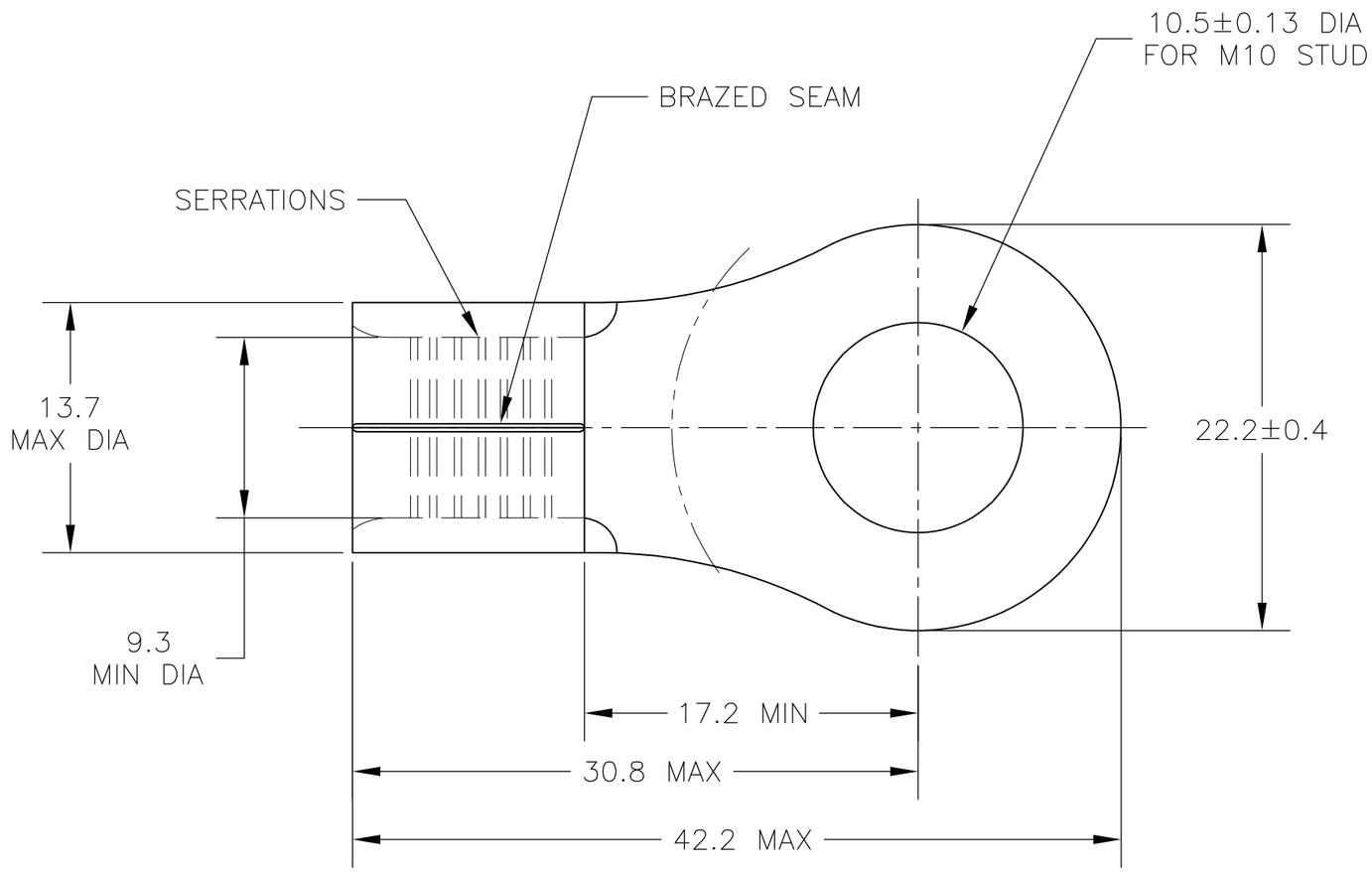

2	160002
FINISH	PART NO

THIS DRAWING IS A CONTROLLED DOCUMENT.

DIMENSIONS: INCHES

TOLERANCES UNLESS OTHERWISE SPECIFIED:
0 PLC ± –
1 PLC ± –
2 PLC ± –
3 PLC ± 0.20
4 PLC ± –
ANGLES ± 5°

MATERIAL: COPPER ASTM B152

FINISH: SEE TABLE

DWN jr ruth 02FEB06
CHK MJ SPICER 02FEB06
APVD MJ SPICER 02FEB06
PRODUCT SPEC —
APPLICATION SPEC —
WEIGHT —

TE Connectivity

NAME: TERMINAL, SOLISTRAND, RING TONGUE, WIRE SIZE : #2

SIZE	CAGE CODE	DRAWING NO	RESTRICTED TO
A3	00779	C-160002	—

CUSTOMER DRAWING | SCALE 3:1 | SHEET 1 OF 1 | REV A2