© 2020 TE Connectivity. All Rights Reserved.

REVISIONS					
P	LTR	DESCRIPTION	DATE	DWN	APVD
	F	REV PER ECO 20-007470	6-1-20	CT	DH

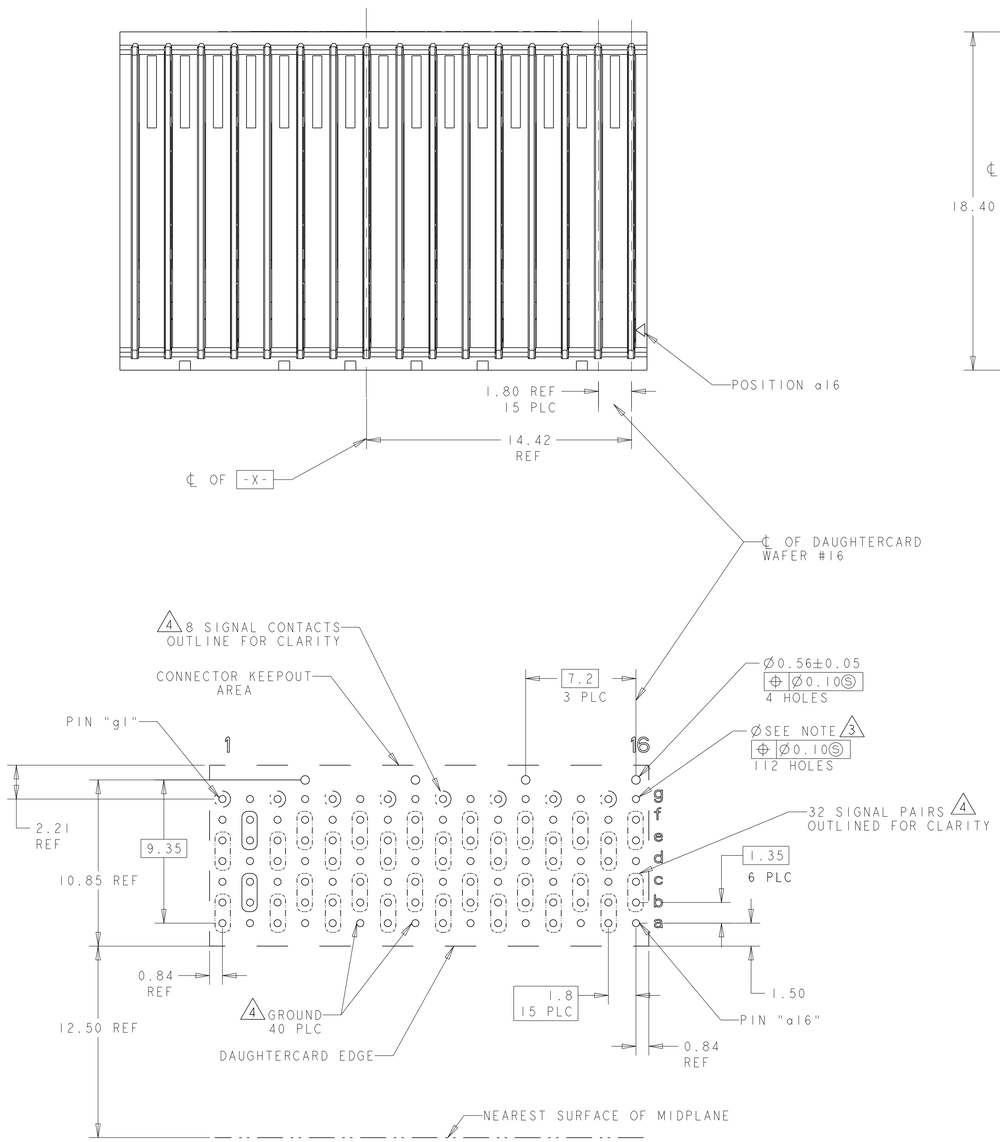

PC BOARD REAR TRANSITION MODULE
(CONNECTOR SIDE)
SCALE 5:1

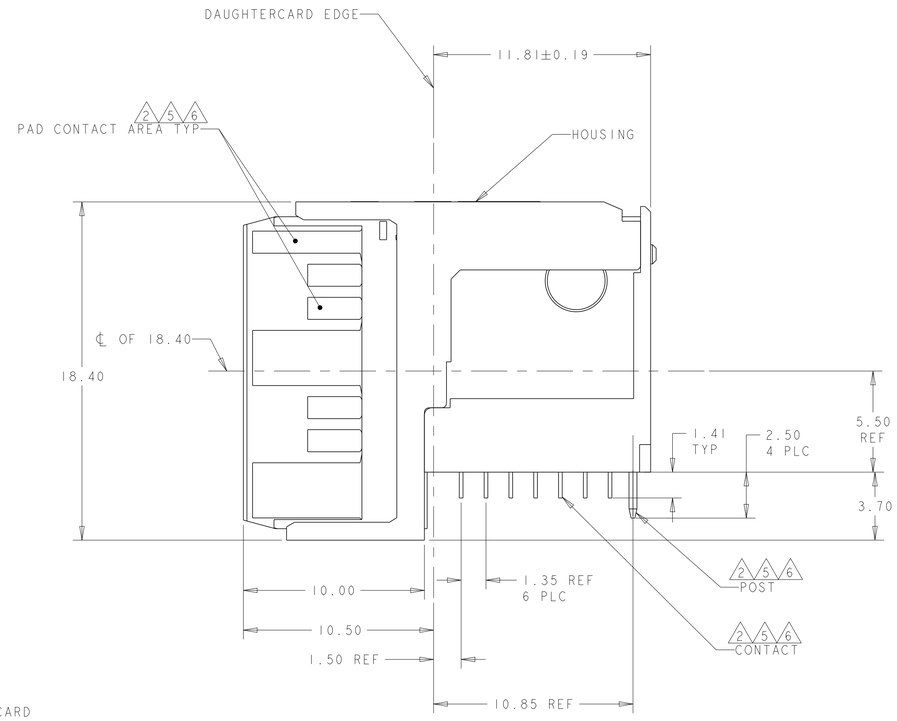

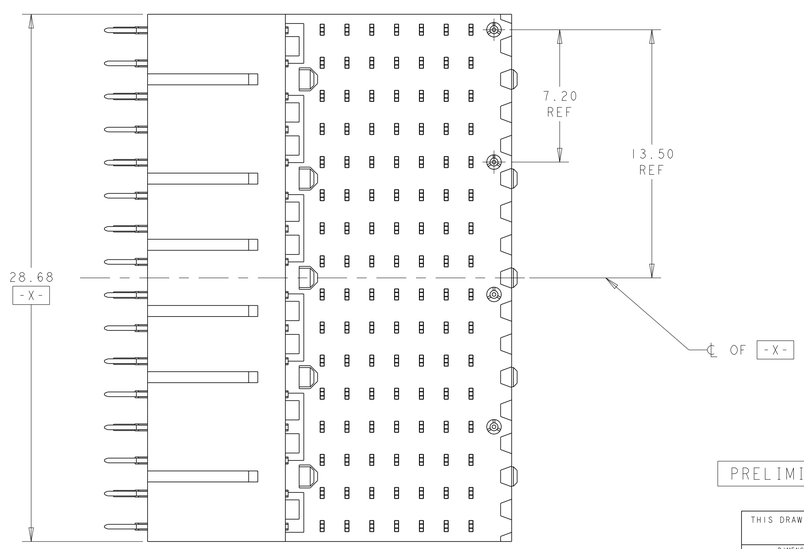

1. HOUSING: LCP, UL94V0, COLOR: BLACK.
   CONTACT: PHOSPHOR BRONZE.
   POST: BRASS WIRE
2. CONTACT: 1.27µm MIN GOLD IN PAD CONTACT AREA
   1.27µm MIN TIN-LEAD ON PCB TAIL
   OVER 1.27µm MIN NICKEL OVER ALL.
   POST 1.27µm MIN NICKEL PLATED.
3. PLATE THROUGH HOLE PER TE PEC. 114-13056
   FIGURE 4.
4. SEE TABLE 1 FOR INTERCONNECTIONS TO
   BACKPLANE CONNECTOR.
5. CONTACT: 1.27µm MIN GOLD IN PAD CONTACT AREA
   1.27µm MIN TIN ON PCB TAIL OVER 1.27µm MIN
   NICKEL OVER ALL.
   POST: 1.27µm MIN NICKEL PLATED.
6. CONTACT: 0.76µm MIN GOLD IN PAD CONTACT AREA
   1.27µm MIN TIN ON PCB TAIL OVER 1.27µm MIN
   NICKEL OVER ALL.
   POST: 1.27µm MIN NICKEL PLATED.

TABLE 1

INTERCONNECTIONS WITH BACKPLANE CONNECTOR
1410140-1, 1410142-1, 1410966-1, 1410967-1

TYPICAL INTERCONNECTIONS FOR EACH ODD-NUMBERED COLUMN (WAFER): 1,3,5,7,9,11,13,15		
CONTACT USAGE	DAUGHTERCARD CONNECTOR PIN	BACKPLANE CONNECTOR PIN
SIGNAL PAIR	ax	ax
	bx	bx
SIGNAL PAIR	dx	ex
	ex	fx
SIGNAL	gx	ix
GROUNDS	cx, fx (ALL COMMONED)	cx, dx, gx, hx

TYPICAL INTERCONNECTIONS FOR EACH EVEN-NUMBERED COLUMN (WAFER): 2,4,6,8,10,12,14,16		
CONTACT USAGE	DAUGHTERCARD CONNECTOR PIN	BACKPLANE CONNECTOR PIN
SIGNAL PAIR	bx	cx
	cx	dx
SIGNAL PAIR	ex	gx
	fx	hx
GROUNDS	ax, dx, gx, (ALL COMMONED)	ax, bx, ex, fx, ix

NOTE: "x" DESIGNATES THE COLUMN NUMBER

PRELIMINARY-NOT RELEASED FOR PRODUCTION

PLATING	PART NO
5	1410975-4
2	1410975-3
6	1410975-2

THIS DRAWING IS A CONTROLLED DOCUMENT.

DIMENSIONS: mm

TOLERANCES UNLESS OTHERWISE SPECIFIED:
0 PLC ±
1 PLC ±0.5
2 PLC ±0.13
3 PLC ±
4 PLC ±
ANGLES ±1°0'

MATERIAL 1

FINISH SEE TABLE

DWN R. TREA 22FEB2006
CHK G.GRIFFITH 22FEB2006
APVD G.GRIFFITH 22FEB2006

PRODUCT SPEC 108-2072
APPLICATION SPEC 114-13056
WEIGHT -

TE Connectivity

NAME RIGHT-ANGLE PLUG ASSEMBLY, 7 ROW, CENTER, 20.3mm, MultiGig RT2, DAUGHTERCARD CONNECTOR, DIFFERENTIAL

SIZE A1 | CAGE CODE 00779 | DRAWING NO C-1410975 | RESTRICTED TO

CUSTOMER DRAWING | SCALE 6:1 | SHEET 1 OF 1 | REV F

4805 (3/13)