REV.	DATE	DESCRIPTION
NC	03/21/04	UPDATE DRAWING FORMAT

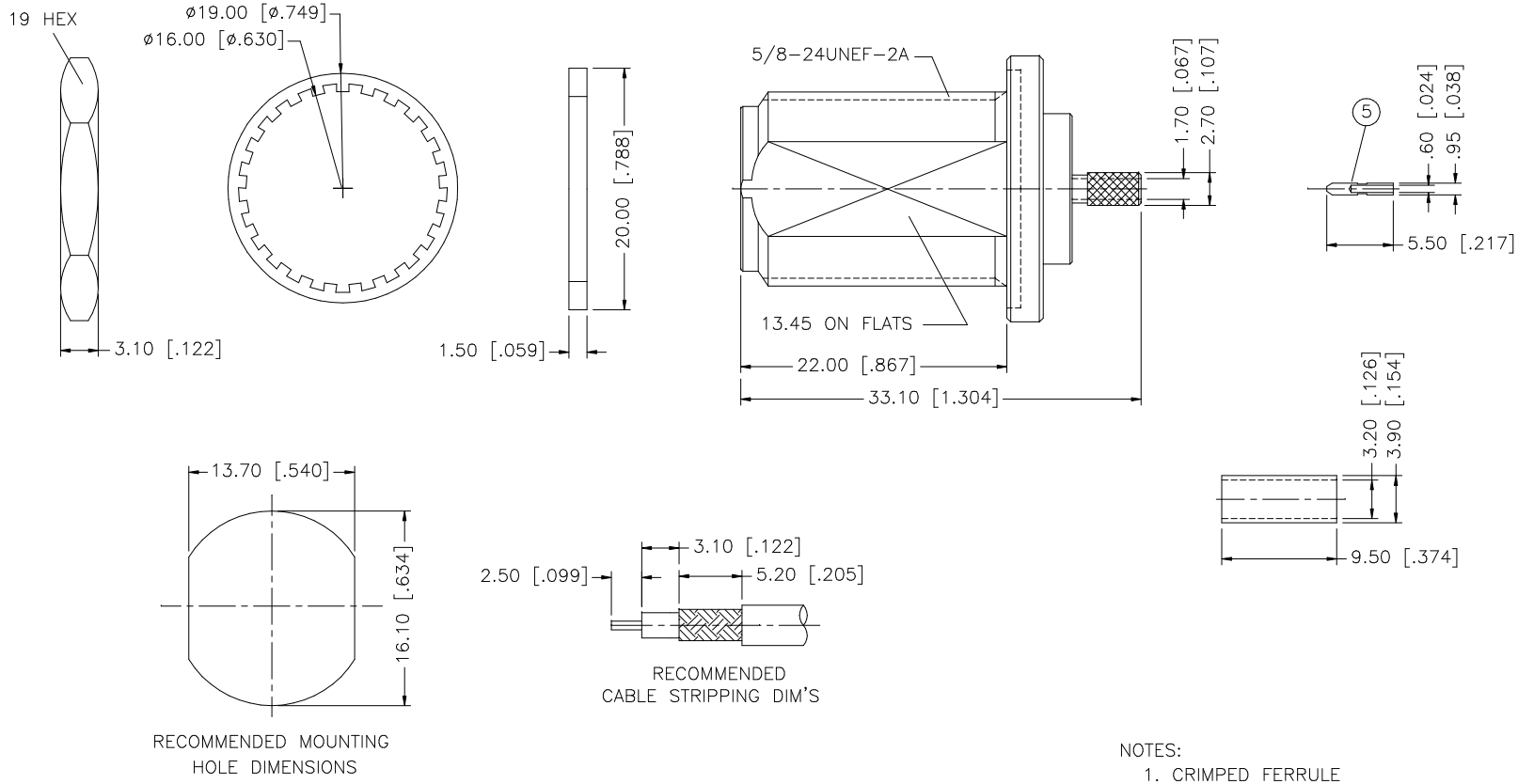

RECOMMENDED MOUNTING HOLE DIMENSIONS

RECOMMENDED CABLE STRIPPING DIM'S

NOTES:

1. CRIMPED FERRULE
   HEX CRIMP SIZE .128"
2. CRIMPED CONTACT PIN
   SQ. CRIMP SIZE 0.7mm OR SOLDER
3. MAX. PANEL THICKNESS = 6.5mm

	DESCRIPTION	MATERIAL	FINISH	QTY
8				
7	FERRULE	COPPER	NEXCOTE	1
6	GASKET	SILICONE	RED	1
5	HEX NUT	BRASS	NEXCOTE	1
4	LOCK WASHER	BRASS	NEXCOTE	1
3	CONTACT PIN	PHOS. BRONZE	GOLD	1
2	INSULATOR	TEFLON	NATURAL	1
1	BODY	BRASS	NEXCOTE	1

UNLESS OTHERWISE SPECIFIED DIMENSIONS ARE IN MILLIMETERS. DIMENSIONS IN [ ] ARE IN INCHES AND FOR CUSTOMER REFERANCE ONLY.

UNLESS OTHERWISE SPECIFIED TOLERANCES FOR MILLIMETERS ARE:
0.5 – 8mm ± 0.20mm
8 – 30mm ± 0.40mm
30 – 120mm ± 0.50mm

UNLESS OTHERWISE SPECIFIED TOLERANCES FOR INCHES ARE:
.020 – .315 = ± 0.007"
.315 – 1.180 = ± 0.015"
1.180 – 4.724 = ± 0.020"

DO NOT SCALE DRAWING

APPROVALS		DATE
DRAWN	G.R.S.	03/21/04
CHECKED		
ISSUED		
SHEET	1 OF 1	
CAD FILE	C:/172/172129RP.DWG	

Amphenol Connex

PART DESCRIPTION
N REVERSE POLARITY BULKHEAD CRIMP JACK
(FOR RG–174/U, 188A/U, 316/U)

PART NO. 172129RP

DWG. NO. 172129RP.DWG | REV. NC | SIZE A | SCALE NA