RoHS 2002/95/EC Compliant

PLAIN - EMC SEALED IP68

BOX SIZE (MM)						ORDER CODE		
PCB GUIDE	L	W	H	Screw Qty	Size	Plain	Powder Coated	Nylon Coated
	88.9	34.9	30.5	4	A	480-C010	481-C010 **	482-C010 **
	114.3	63.5	30.5	4	B	480-C020	481-C020 **	482-C020 **
	114.3	88.9	55.9	4	C	480-C030	481-C030 **	482-C030 **
	114.3	64.5	55.9	4	D	480-C040	481-C040 **	482-C040 **
	171.5	120.6	55.9	6	E	480-C050	481-C050 **	482-C050 **
	171.5	120.6	106.7	6	F	480-C060	481-C060 **	482-C060 **
	222.3	146	56	6	G	480-C070	481-C070 **	482-C070 **
	222.3	146	106.7	6	H	480-C080	481-C080 **	482-C080 **
*	275	175	66	6	J	480-C090	481-C090 **	482-C090 **
*	139.7	101.6	77	4	K	480-C100	481-C100 **	482-C100 **
*	165	127	77	6	L	480-C110	481-C110 **	482-C110 **
*	120	100	36	4	M	480-C120	481-C120 **	482-C120 **
*	250	250	100.3	8	N	480-C130	481-C130 **	482-C130 **
*	80	55	26	4	P	480-C140	481-C140 **	482-C140 **
*	60	55	31	4	Q	480-C150	481-C150 **	482-C150 **

* Boxes with PCB guides ** Colour option - Code Suffix: Grey = A Blue = B Black = E

FLANGED - EMC SEALED IP68

BOX SIZE (MM)							ORDER CODE		
PCB GUIDE	L	L (exc Flg)	W	H	Screw Qty	Size	Plain	Powder Coated	Nylon Coated
*	114.3	89.2	35.15	30.5	4	A	483-C010	484-C010**	485-C010**
*	139.7	114.1	63.6	30.5	4	B	483-C020	484-C020**	485-C020**
*	139.7	114.2	63.7	55.9	4	C	483-C030	484-C030**	485-C030**
*	139.7	114.7	89.15	55.9	4	D	483-C040	484-C040**	485-C040**
*	202	171.8	120.8	55.9	6	E	483-C050	484-C050**	485-C050**
*	202	171.8	120.8	106.7	6	F	483-C060	484-C060**	485-C060**
*	252	222.6	146.4	55.9	6	G	483-C070	484-C070**	485-C070**
*	170	140	101.6	77	4	K	483-C100	484-C100**	485-C100**
*	152	120	100.2	36	4	M	483-C120	484-C120**	485-C120**

* Boxes with PCB guides ** Colour option - Code Suffix: Grey = A Blue = B Black = E

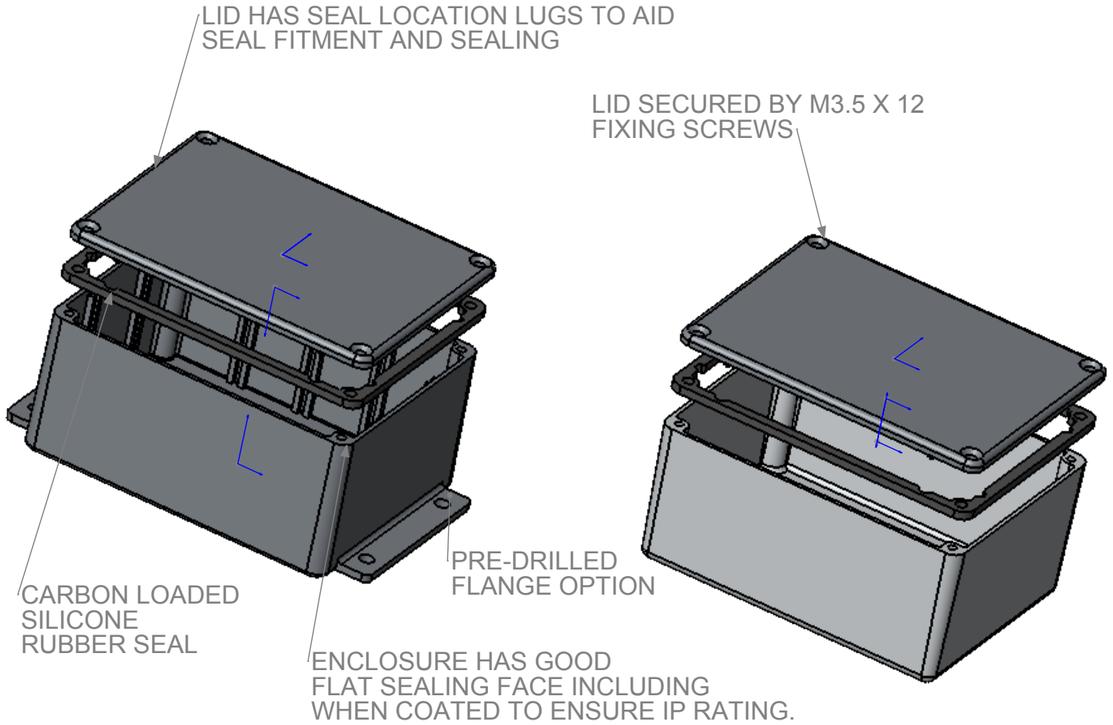

- A RANGE OF DIE CAST ALUMINIMUM ENCLOSURE SEALED TO BS EN 60529:1992 IP66, IP67 AND IP68 (5Mtrs for 1 hour)
- CARBON LOADED SEMI CONDUCTIVE SILICONE RUBBER SEAL AP701/2
- MIN SEAL THICKNESS 3.0MM - MIN SEAL FRAME WIDTH 4.0MM
- MIN ENCLOSURE WALL THICKNESS 1.5MM
- MIN ENCLOSURE LID THICKNESS 1.5MM

INTERPOLATED SIZES ARE PERMITTED PROVIDED THE MINIMUM CENTRES ARE MAINTAINED IN ACCORDANCE WITH THE 455/459 SERIES SPECIFICATION

PROPRIETARY AND CONFIDENTIAL
THE INFORMATION CONTAINED IN THIS DRAWING IS THE SOLE PROPERTY OF **DEM MANUFACTURING**. ANY REPRODUCTION IN PART OR AS A WHOLE WITHOUT THE WRITTEN PERMISSION OF **DEM MANUFACTURING** IS PROHIBITED.

DEM

Drawn by W.COXON 27/05/09

FINISH: AS ABOVE

THIRD ANGLE PROJECTION

DEBUR AND BREAK SHARP EDGES

IF IN DOUBT ASK DO NOT SCALE DRAWING

UNLESS OTHERWISE SPECIFIED: DIMENSIONS ARE IN MILLIMETRES LINEAR TOLERANCES:

NO DECIMAL PLACES ±0.5mm
1 DECIMAL PLACE ±0.1mm
2 DECIMAL PLACES ±0.03mm

ANGULAR TOLERANCES: ±1°

MATERIAL:

A3

TITLE: GENERAL SPECIFICATION IP68 EMC RANGE OF ENCLOSURES

DWG NO. 48x-C IP68 EMC RANGE

ISSUE A

TEL: +44 1724 273200 E-MAIL: SALES@DEM-UK.COM WEBSITE: WWW.DEM-UK.COM

WEIGHT: 4565862.094

SCALE:1:2

SHEET 1 OF 1