THIS DRAWING IS UNPUBLISHED. RELEASED FOR PUBLICATION 2009
© COPYRIGHT 2009 Tyco Electronics AMP GmbH ALL RIGHTS RESERVED.

LOC	DIST
A1	-

REVISIONS

P	LTR	DESCRIPTION	DATE	DWN	APVD
	B1	Zeichnung ueberarbeitet. vorlauefig entfernt	21MAR1997	Bers	
	B2	Verarbeitungshinweis ergaenzt	09JUN1997	Scha	
	B3	Dimple angepasst	05MAY2006	Abr	
	B4	NEW PROE DRAWING. Part 968045-6 obsolete	07JUN2011	Kirs	Mair

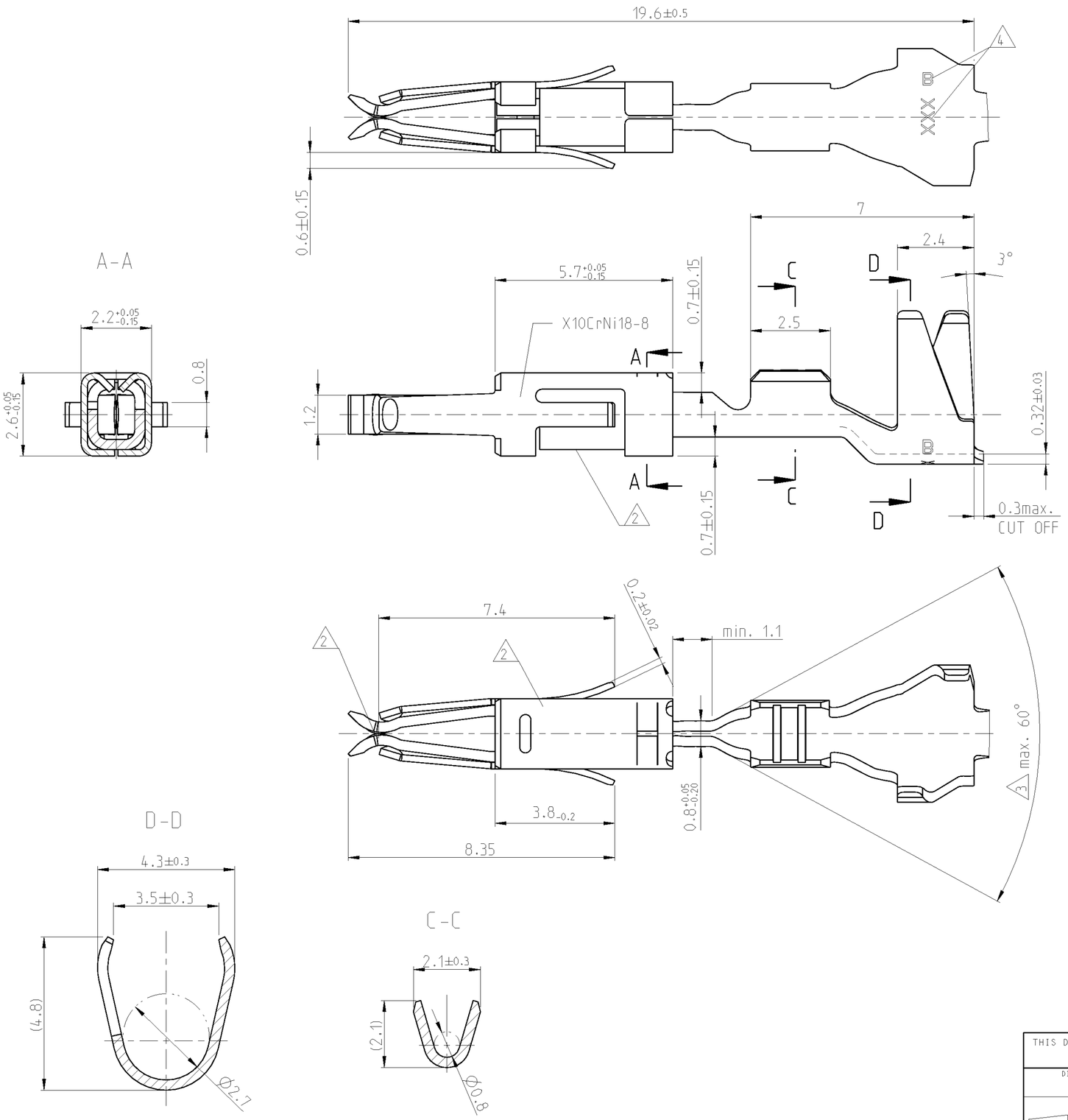

NOTES:
Bemerkungen:

1. CONTACT BODY ALLAROUND TINNED MIN. 0.8 µm
Kontaktkoerper allseitig verzinnt min. 0.8 µm
SPRING PLAIN
Ueberfeder blank

2. CONTACT BODY GALV. NICKEL MIN. 0.2 µm
Kontaktkoerper galv. vernickelt min. 0.2 µm
PREFORMED CONTACT AREA OUTSIDE GALV. GOLD MIN. 0.8 µm
OVER GALV. NICKEL MIN. 1.3 µm
vorgeformte Kontaktzone aussen galv. vergoldet min. 0.8 µm ueber galv. vernickelt min. 1.3 µm
PREFORMED CONTACT AREA INSIDE GALV. TINNED MIN. 1 µm
OVER GALV. NICKEL MIN 1.3 µm
vorgeformte Kontaktzone innen galv. verzinnt min. 1 µm
ueber galv. vernickelt min. 1.3 µm
CONTACT BODY OUTSIDE GALV. GOLD MIN. 0.8 µm
OVER GALV. NICKEL MIN 1.3 µm
Kontaktkoerper aussen galv. vergoldet min. 0.8 µm
ueber galv. vernickelt min. 1.3 µm
WIRE CRIMP ZONE GALV. TINNED MIN. 1 µm
Drahtcrimpzone galv. verzinnt min. 1 µm
SPRING GALV. GOLD MIN. 0.5 µm
Ueberfeder galv. vergoldet min. 0.5 µm

3. TRANSITION LIES WITHIN THIS ANGLE
MEASURED STARTING FROM NOMINAL DIMENSION
Uebergang liegt innerhalb dieses Winkels
gemessen ab Nennmass

4. LETTER FOR REVISION STATE AND COMPANY LOGO
Buchstabe fuer Aenderungsstand und Firmenlogo

5. MATED WITH TAB 1.6x0.6
steckbar mit Flachstecker 1.6x0.6

6. WIRE RANGE 0.2 - 0.5 mm² FLR
INSULATIONØ 1.2 - 1.6 mm
Drahtgroessenbereich 0.2 - 0.5 mm² FLR
IsolationsØ 1.2 - 1.6 mm

7. SINGLE WIRE SEAL PN 964971-1
Einzelleiterdichtung PN 964971-1

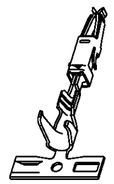

2:1

LP NO	MATERIAL	PART NO	REV
968046-2	CuFe2 (1)	968045-2	B
968046-1	CuSn4 (1)	968045-1	B

THIS DRAWING IS A CONTROLLED DOCUMENT.

DIMENSIONS: mm

TOLERANCES UNLESS OTHERWISE SPECIFIED:
0 PLC ±
1 PLC ± ±0.2
2 PLC ±
3 PLC ±
4 PLC ±
ANGLES ±2°

MATERIAL -
FINISH -

DWN	E.Palmie	11NOV1994
CHK	C.Ott	11NOV1994
APVD	M.Bleicher	17APR2009
PRODUCT SPEC	-	
APPLICATION SPEC	114-18081	
WEIGHT	2.8 g	

TE Connectivity

NAME
MICRO TIMER II
CONTACT A
-

SIZE	CAGE CODE	DRAWING NO	RESTRICTED TO
A2	00779	C-968045	-

CUSTOMER DRAWING

SCALE 10:1 SHEET 1 OF 1 REV B4

1471-9 (3/11)

Pro/ENGINEER DRAWING