THIS DRAWING IS UNPUBLISHED. RELEASED FOR PUBLICATION -,- .
© COPYRIGHT - By - ALL RIGHTS RESERVED.

LOC	DIST
AF	50

REVISIONS

P	LTR	DESCRIPTION	DATE	DWN	APVD
	J	REVISED PER ECR-13-011489	06DEC2013	KH	PD

1 SUPPLIED IN LOOSE PIECE.

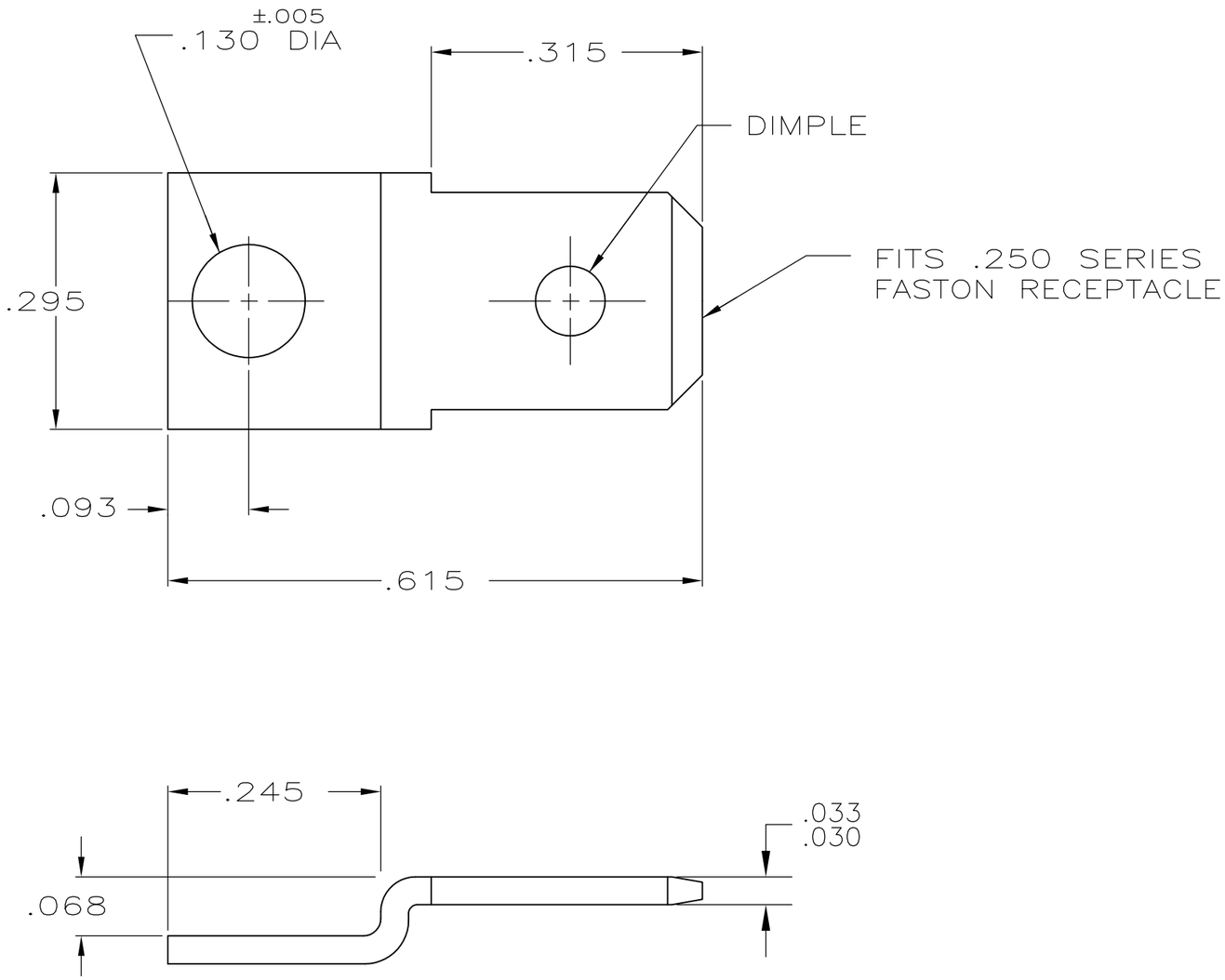

42506-2
PART NO

THIS DRAWING IS A CONTROLLED DOCUMENT.

DIMENSIONS: INCHES

TOLERANCES UNLESS OTHERWISE SPECIFIED:

0 PLC	± -
1 PLC	± -
2 PLC	± -
3 PLC	± .010
4 PLC	± -
ANGLES	± -

MATERIAL: BRASS

FINISH: TIN

DWN	JR RUTH	1/25/89
CHK	MS FEHER	1/25/89
APVD	C MEYERS	1/25/89
PRODUCT SPEC	—	
APPLICATION SPEC	—	
WEIGHT	—	

CUSTOMER DRAWING

TE Connectivity

NAME: TAB, FASTON, .250 SERIES

SIZE	CAGE CODE	DRAWING NO	RESTRICTED TO
A3	00779	C-42506	—

SCALE	SHEET	REV
6:1	1 OF 1	J