THIS DRAWING IS UNPUBLISHED.
QUESTO DISEGNO NON DEVE ESSERE DIVULGATO O RIPRODOTTO
RELEASED FOR PUBLICATION
LIBRE DE SER PUBLICADO
© COPYRIGHT – BY TYCO ELECTRONICS CORPORATION.
ALL INTERNATIONAL RIGHTS RESERVED. TODOS LOS DERECHOS RESERVADOS.
LOS PRODUCTOS AMP ESTAN CUBIERTOS POR PATENTES ACTUALES O PENDIENTES

LOC	DIST
—	—

REVISIONS
REVISCO

P	LTR REV	DESCRIPTION BESCHREIBUNG	DATE DATA	DWN DESS.	APVD APP.
	E	REVISED PER ECO-11-001163	17JAN11	RC	CW

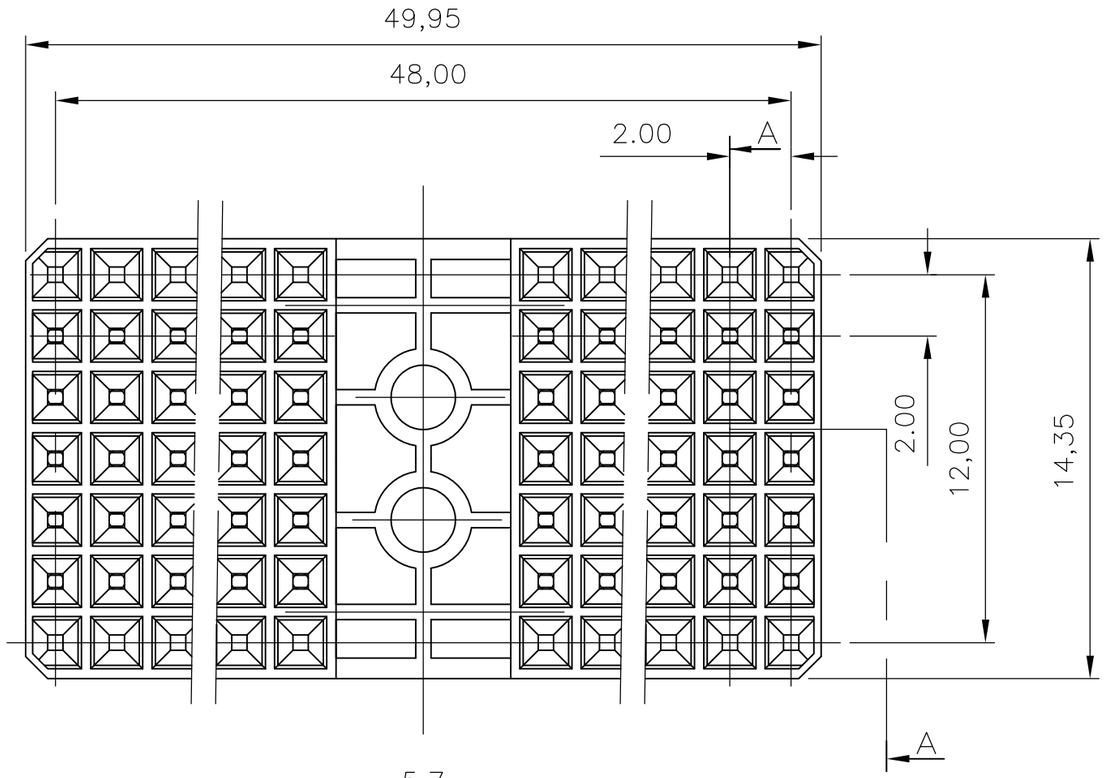

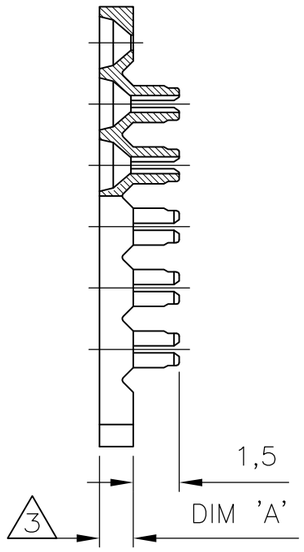

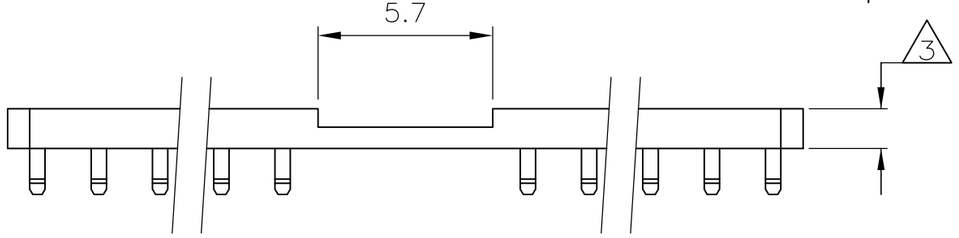

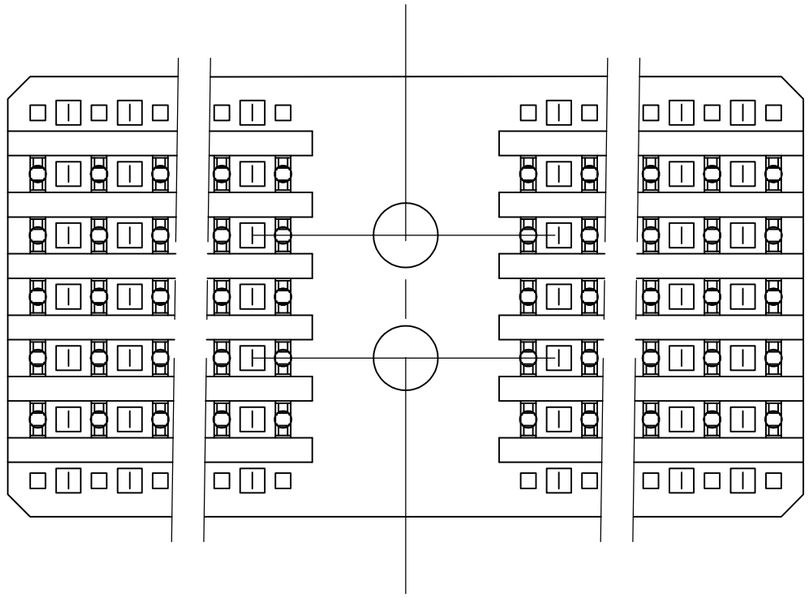

NOTES:

1. MATERIAL: UNFILLED POLYESTER.(GREY)
2. 0-106457-4 AS SHOWN.
3. VARIABLE HEIGHT.
4. TO DETERMINE THE RECOMMENDED SPACER-THICKNESS FOR A GIVEN PCB THICKNESS: SEE APPLICATION SPECIFICATION 114-19031.
5. OBSOLETE PARTS: OBSOLETE CIS STREAMLINING PER D.RENAUD/D.SINISI

	PARTNUMBER	4 DIM "A"
5 OBSOLETE	~~0-106457-1~~	0,7
	0-106457-2	0,9
OBSOLETE	~~0-106457-3~~	1,1
	~~0-106457-4~~	1,3
	0-106457-5	1,5
	0-106457-6	1,7
	0-106457-7	1,9

THIS DRAWING IS A CONTROLLED DOCUMENT.
QUESTO DISEGNO E` UN DOCUMENTO CONTROLLATO.

DIMENSIONS: DIMENSUES mm

TOLERANCES UNLESS OTHERWISE SPECIFIED: TOLERANCIAS (SUIV NB DE DECIMALES):
0 ~~PLC/LUG ± –~~
1 ~~PLC/LUG ± –~~
2 ~~PLC/DEC ± –~~ ±0.2
3 ~~PLC/LUG ± –~~
4 ~~PLC/LUG ± –~~
ANGLES/ANGULARES ± –

MATERIAL 1

FINISH/OBERFLAECHE/FARBE ACABADO
SEE TABLE

DWN/DES 29 JUNE 1993 L.V.D.HEIJDEN
CHK/CBMP 29 JUNE 1993 F.V.KONINGSBRUGGE
APVD F.V.KONINGSBRUGGE
PRODUCT SPEC 108-19082
APPLICATION SPEC SPEC. APPLICATION 114-19029
WEIGHT PESO –

Tyco Electronics
Tyco Electronics Corporation
Oostkamp, Belgium.

NAME
Z-PACK 2mm HM SPACER TYPE A

SIZE TAM	CAGE CODE CODIGO	DRAWING NO	RESTRICTED TO RESERVE A
A3	00779	C- 106457	—

CUSTOMER DRAWING/PLAN CLIENT UNIQUEMENT POUR REFERENCE | SCALE ESCALA — | SHEET FEUILLE 1 OF 1 | REV E