THIS DRAWING IS UNPUBLISHED. RELEASED FOR PUBLICATION -.- .
© COPYRIGHT - BY TYCO ELECTRONICS CORPORATION. ALL RIGHTS RESERVED.

LOC	DIST
CM	0

REVISIONS

P	LTR	DESCRIPTION	DATE	DWN	APVD
	R	EC 0G3B 0249 05	27SEP05	BSV	RCJ

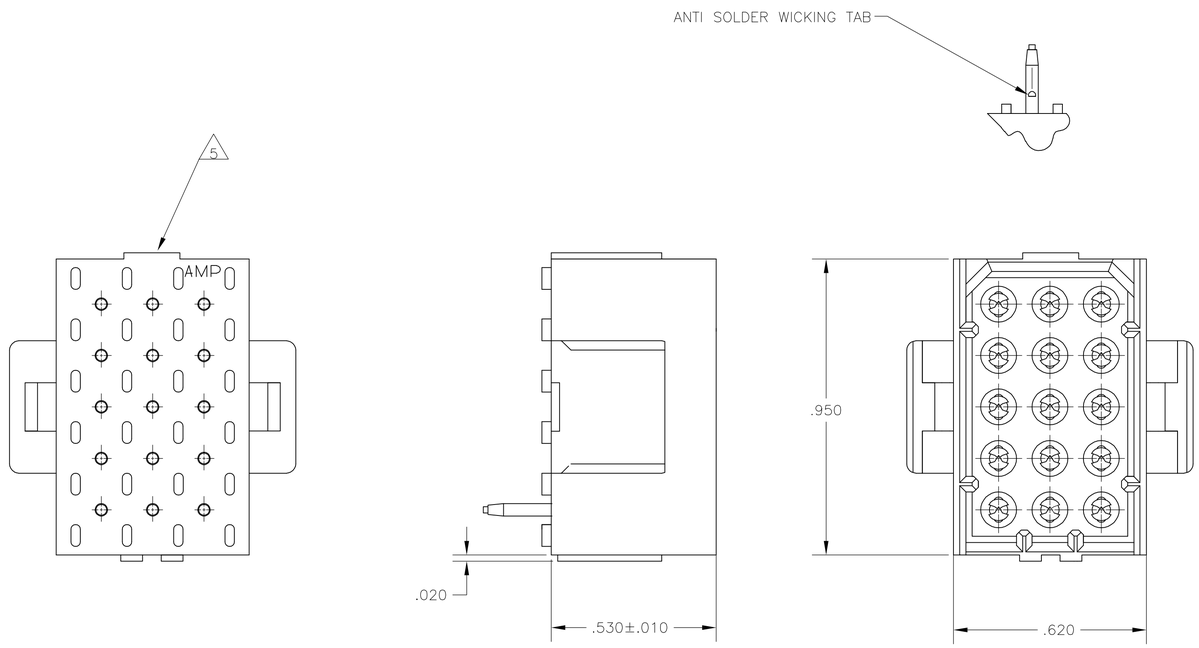

1. FITS SOCKET HOUSING 640523.
2. ASSEMBLY CONFORMS TO AMP SOLDERABILITY SPEC. 109-11-3.
3. FOR USE WITH .063 THICK P.C. BOARD.
4. CONTACT IS PLATED OVERALL WITH.000050 NICKEL, THEN .000030 GOLD OVER CONTACT LENGTH INDICATED AND .000150 MATTE TIN-LEAD ON SOLDER TAIL END.
5. UL AND CSA LOGO LOCATED ON THIS SURFACE.
6. FOR USE WITH .120 THICK P.C. BOARD.
7. CONTACT IS PLATED OVERALL WITH.000050 NICKEL, THEN .000030 GOLD OVER CONTACT LENGTH INDICATED AND .000150 MATTE TIN ON SOLDER TAIL END.

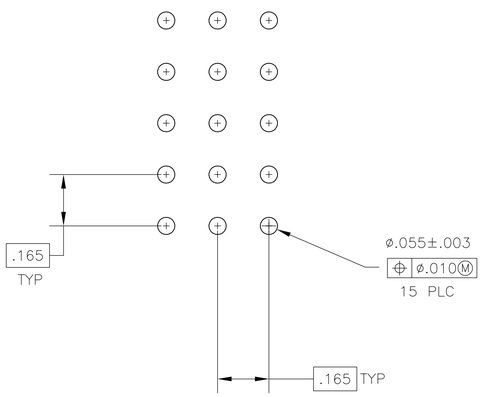

RECOMMENDED P.C. BOARD LAYOUT

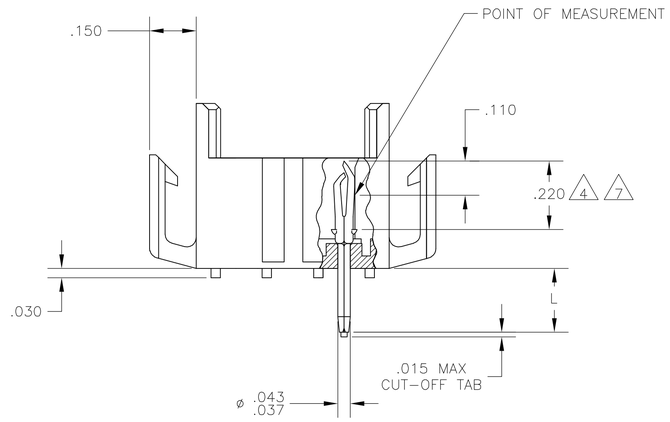

.210 6	BRICK RED	GOLD 7	2-640503-4
.150 3	BRICK RED	GOLD 7	2-640503-2
.210 6	BRICK RED	GOLD 4	640503-4
.210 6	BRICK RED	PRE-TIN	640503-3
.150 3	BRICK RED	GOLD 4	640503-2
.150 3	BRICK RED	PRE-TIN	640503-1
"L" +.010 -.020	HOUSING COLOR	PIN FINISH	PART NUMBER

.010	0.25	.055	1.40	.220	5.59	-	-
.008	0.20	.043	1.09	.210	5.33	-	-
.005	0.13	.037	0.94	.165	4.19	-	-
.003	0.08	.030	0.76	.150	3.81	.950	24.13
.000050	0.00127	.020	0.51	.110	2.79	.620	15.75
.000030	0.00076	.015	0.38	.063	1.60	.530	13.46
IN	MM	IN	MM	IN	MM	IN	MM

CONVERSION TABLE

THIS DRAWING IS A CONTROLLED DOCUMENT.

DIMENSIONS: INCHES

TOLERANCES UNLESS OTHERWISE SPECIFIED:
0 PLC ± -
1 PLC ± -
2 PLC ± -
3 PLC ± .005
4 PLC ± -
ANGLES ± 0° 30'

MATERIAL: HOUSING FLAME RETARDANT NYLON, UL 94V-0 PIN, .008 PH BRZ.

FINISH: SEE TABLE

METRIC

DWN J. HUFFMAN 28 APR 98
CHK R. SWING 28 APR 98
APVD T. REDDICK 28 APR 98

PRODUCT SPEC —
APPLICATION SPEC —
WEIGHT —

CUSTOMER DRAWING

tyco Electronics
Tyco Electronics Corporation
Harrisburg, PA 17105-3608

NAME: HEADER ASSEMBLY, PIN, 15 POSITION, MR.

SIZE	CAGE CODE	DRAWING NO	RESTRICTED TO
A1	00779	C-640503	—

SCALE	SHEET	REV
4:1	1 OF 1	R