THIS DRAWING IS UNPUBLISHED. RELEASED FOR PUBLICATION -,- .
© COPYRIGHT - By - ALL RIGHTS RESERVED.

LOC	DIST
GP	00

REVISIONS

P	LTR	DESCRIPTION	DATE	DWN	APVD
	H	REVISED PER ECO-11-022158	08NOV2011	CJV	CWR

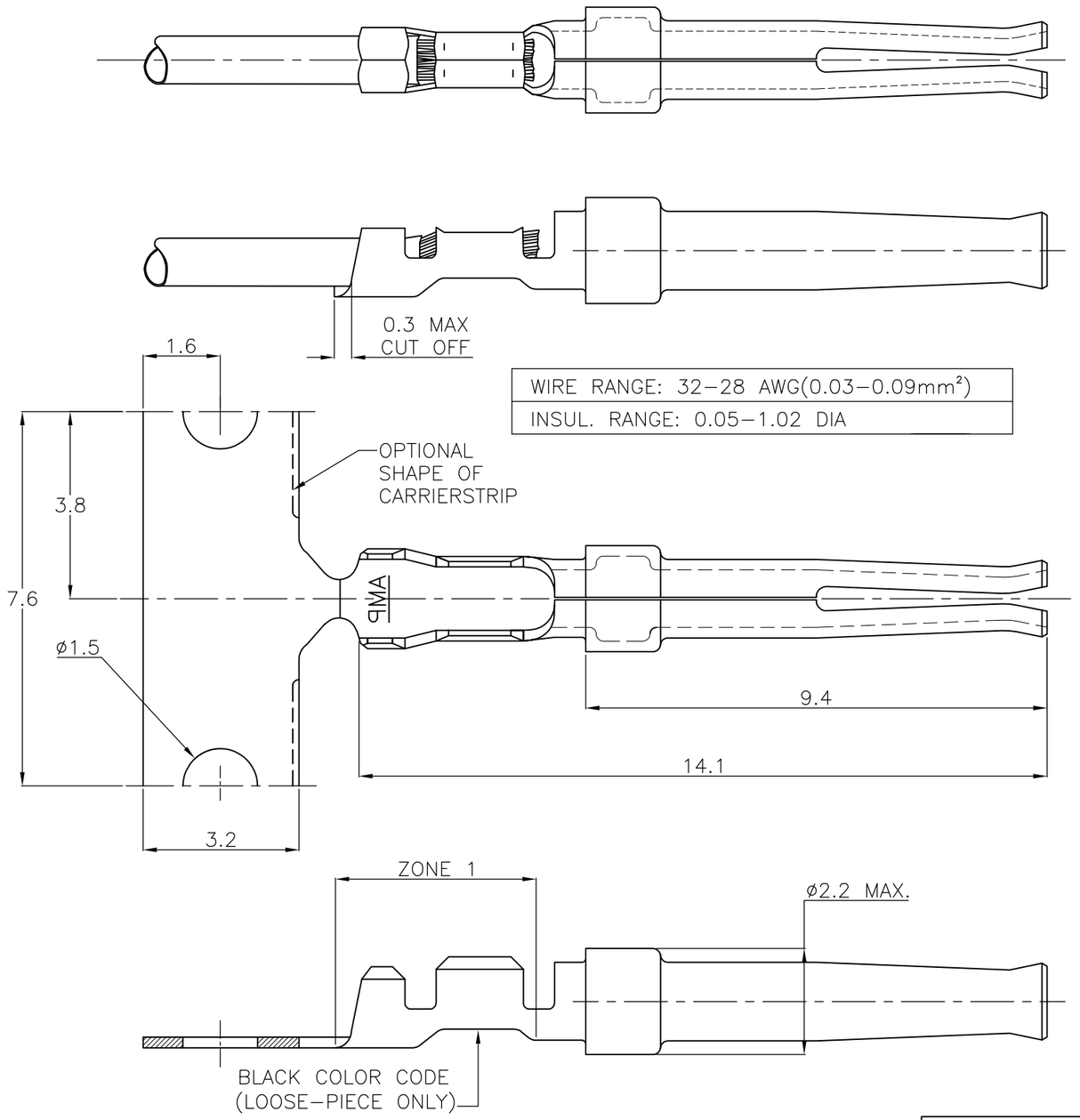

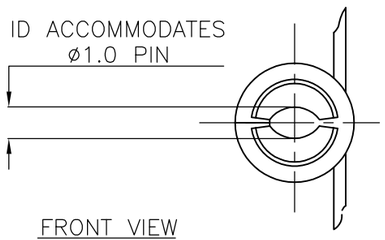

FRONT VIEW

1. FOR MINI-APPLICATOR CRIMPING.
2. FOR STANDARD APPLICATOR CRIMPING.
3. FOR REEL-FEED HANDTOOL CRIMPING, 500 CONTACTS ON A SMALL REEL.
4. MATERIAL: PHOSPHOR BRONZE.
5. UNDERCOATING: 1.3µm NICKEL. SELECTIVE: 0.8µm GOLD. REMAINDER: GOLD FLASH.
6. UNDERCOATING: 1.3µm NICKEL. SELECTIVE: 0.8µm GOLD. ZONE 1: BRIGHT TIN.
7. UNDERCOATING: 0.8µm NICKEL. SELECTIVE: 0.4µm GOLD. REMAINDER: GOLD FLASH.
8. UNDERCOATING: 0.8µm NICKEL. SELECTIVE: 0.4µm GOLD. ZONE 1: BRIGHT TIN.
9. UNDERCOATING: 1.3µm NICKEL. SELECTIVE: 1.3µm GOLD. REMAINDER: GOLD FLASH.
10. UNDERCOATING: 0.8µm NICKEL. SELECTIVE: 2.0µm GOLD REMAINDER: BRIGHT TIN.
11. UNDERCOATING: 0.8µm NICKEL. SELECTIVE: 0.2µm GOLD. REMAINDER: GOLD FLASH.
12. UNDERCOATING: 0.8µm NICKEL. SELECTIVE: 0.2µm GOLD. ZONE 1: BRIGHT TIN.
13. OBSOLETE PARTS: OBSOLETE CIS STREAMLINING PER D. RENAUD/ D. SINISI

13	12	1-166998-3	–	–	~~1-166996-3~~
13	11	1-166998-2	–	–	~~1-166996-2~~
13	9	166998-7	–	–	~~166996-7~~
	8	166998-6	–	–	166996-6
	7	166998-5	–	–	166996-5
	10	–	–	–	166996-4
	6	166998-3	–	–	166996-3
	5	166998-2	–	–	166996-2
	FINISH	LOOSE PIECE	PART NUMBER 3	PART NUMBER 2	PART NUMBER 1

THIS DRAWING IS A CONTROLLED DOCUMENT.

DIMENSIONS: mm

TOLERANCES UNLESS OTHERWISE SPECIFIED:

0 PLC	± –
1 PLC	± 0.127
2 PLC	± –
3 PLC	± –
4 PLC	± –
ANGLES	± –

MATERIAL: –

FINISH: SEE TABLE

DWN	C. VALENTINE	08NOV2011
CHK	C. ROHDE	08NOV2011
APVD	C. ROHDE	08NOV2011
PRODUCT SPEC	108-40005	
APPLICATION SPEC	114-10000	
WEIGHT	–	

TE Connectivity

NAME: SOCKET CONTACT, SIZE 20 DF. –

SIZE	CAGE CODE	DRAWING NO	RESTRICTED TO
A3	00779	C-166996	–

CUSTOMER DRAWING

SCALE	SHEET	REV
NTS	1 OF 1	H