THIS DRAWING IS UNPUBLISHED. RELEASED FOR PUBLICATION -,- .
© COPYRIGHT - BY TYCO ELECTRONICS CORPORATION. ALL RIGHTS RESERVED.

LOC	DIST
CM	00

REVISIONS

P	LTR	DESCRIPTION	DATE	DWN	APVD
	E	ECO-07-012892	22JUN07	KW	DB
	E1	REVISED PER ECO-09-024717	06NOV09	KK	AEG

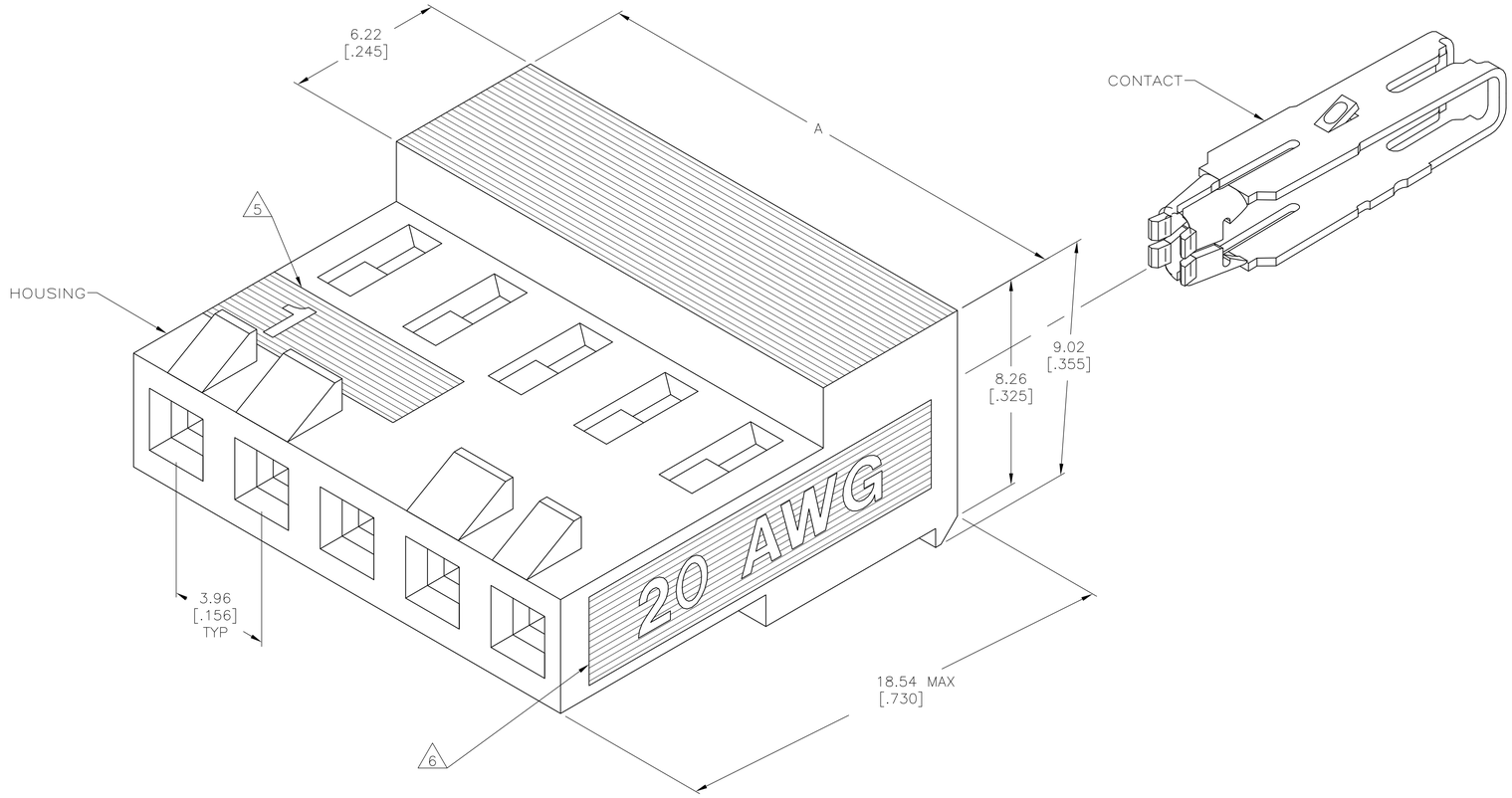

1. OPERATING TEMPERATURE: -55°C TO 105°C

2. MATERIAL: HOUSING, NYLON 6/6, UL 94V-0, BLACK
CONTACT, 0.30 [.012] THICK COPPER ALLOY

3. FINISH: BRIGHT TIN-LEAD PLATE 0.00203-0.00508 [.000080-.000200"] THICK OR MATTE WHISKER MITIGATED TIN 0.00203 [.000080] MIN THICKNESS OVER NICKEL UNDERPLATE.

4. LUBRICATED WITH AMP ANTI-FRETTING LUBRICANT.

5. IDENTIFICATION NUMBER FOR FIRST CIRCUIT.

6. WIRE GAUGE IDENTIFICATION

7. DIMENSIONS IN BRACKETS ARE IN INCHES.

8. CONTACT MUST ACCEPT 1.14±0.03 [.045±.001]
SQUARE POST AND REMAINED LOCKED IN POSITION.

9. OBSOLETE PARTS: OBSOLETE CIS STREAMLINING PER D.RENAUD/D.SINISI

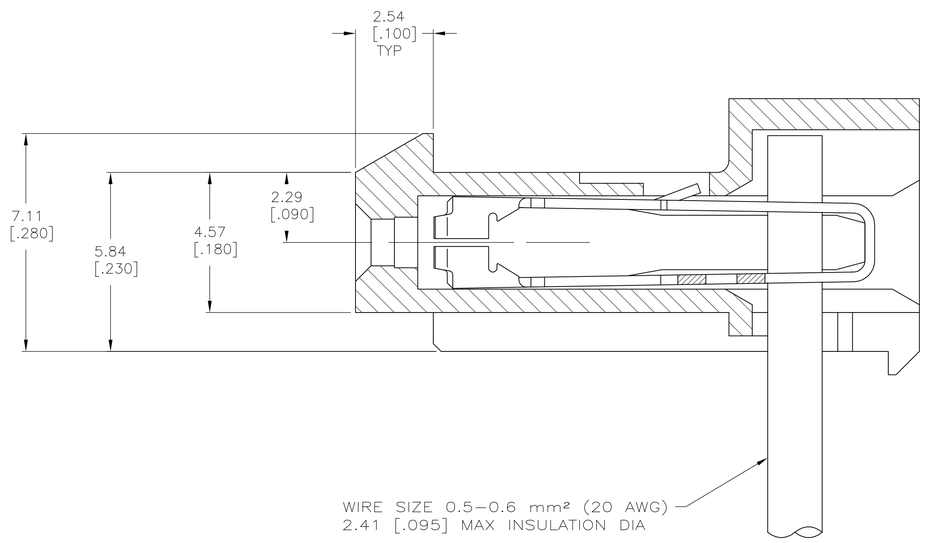

	FINISH	A		NO OF CKTS	PART NO
	TIN	47.55±0.30	[1.872±.012]	12	4-644370-2
	TIN	43.59±0.30	[1.716±.012]	11	4-644370-1
	TIN	39.62±0.30	[1.560±.012]	10	4-644370-0
	TIN	35.66±0.30	[1.404±.012]	9	3-644370-9
	TIN	31.70±0.30	[1.248±.012]	8	3-644370-8
	TIN	27.74±0.30	[1.092±.012]	7	3-644370-7
	TIN	23.77±0.30	[.936±.012]	6	3-644370-6
	TIN	19.81±0.30	[.780±.012]	5	3-644370-5
	TIN	15.85±0.15	[.624±.006]	4	3-644370-4
	TIN	11.89±0.15	[.468±.006]	3	3-644370-3
	TIN	7.92±0.15	[.312±.006]	2	3-644370-2
SUPERCEDED 9	TIN-LEAD	47.55±0.30	[1.872±.012]	12	~~1-644370-2~~
	TIN-LEAD	43.59±0.30	[1.716±.012]	11	~~1-644370-1~~
	TIN-LEAD	39.62±0.30	[1.560±.012]	10	~~1-644370-0~~
	TIN-LEAD	35.66±0.30	[1.404±.012]	9	~~644370-9~~
	TIN-LEAD	31.70±0.30	[1.248±.012]	8	644370-8
9 SUPERCEDED	TIN-LEAD	27.74±0.30	[1.092±.012]	7	~~644370-7~~
	TIN-LEAD	23.77±0.30	[.936±.012]	6	644370-6
	TIN-LEAD	19.81±0.30	[.780±.012]	5	644370-5
9 SUPERCEDED	TIN-LEAD	15.85±0.15	[.624±.006]	4	~~644370-4~~
	TIN-LEAD	11.89±0.15	[.468±.006]	3	644370-3
9 SUPERCEDED	TIN-LEAD	7.92±0.15	[.312±.006]	2	~~644370-2~~

THIS DRAWING IS A CONTROLLED DOCUMENT.

DIMENSIONS: mm [INCHES]

TOLERANCES UNLESS OTHERWISE SPECIFIED:
0 PLC ± -
1 PLC ± -
2 PLC ± -
3 PLC ± 0.13 [.005]
4 PLC ± -
ANGLES ± -

MATERIAL 2
FINISH 3

DWN 14AUG2003 S. CARPENTER
CHK 14AUG2003 D. BOSSI
APVD 14AUG2003 D. BOSSI
PRODUCT SPEC 108-1219
APPLICATION SPEC 114-1048
WEIGHT -

Tyco Electronics
Tyco Electronics Corporation
Harrisburg, PA 17105-3608

NAME MTA-156 CONNECTOR ASSEMBLY, QUAD, 20 AWG, WITH LOCKING RAMP

SIZE A1 | CAGE CODE 00779 | DRAWING NO C-644370 | RESTRICTED TO -

CUSTOMER DRAWING | SCALE 10:1 | SHEET 1 OF 1 | REV E1

METRIC