No.	Changes and/or Note No.	Date	Intr.	No.	Changes and/or Note No.	Date	Intr.

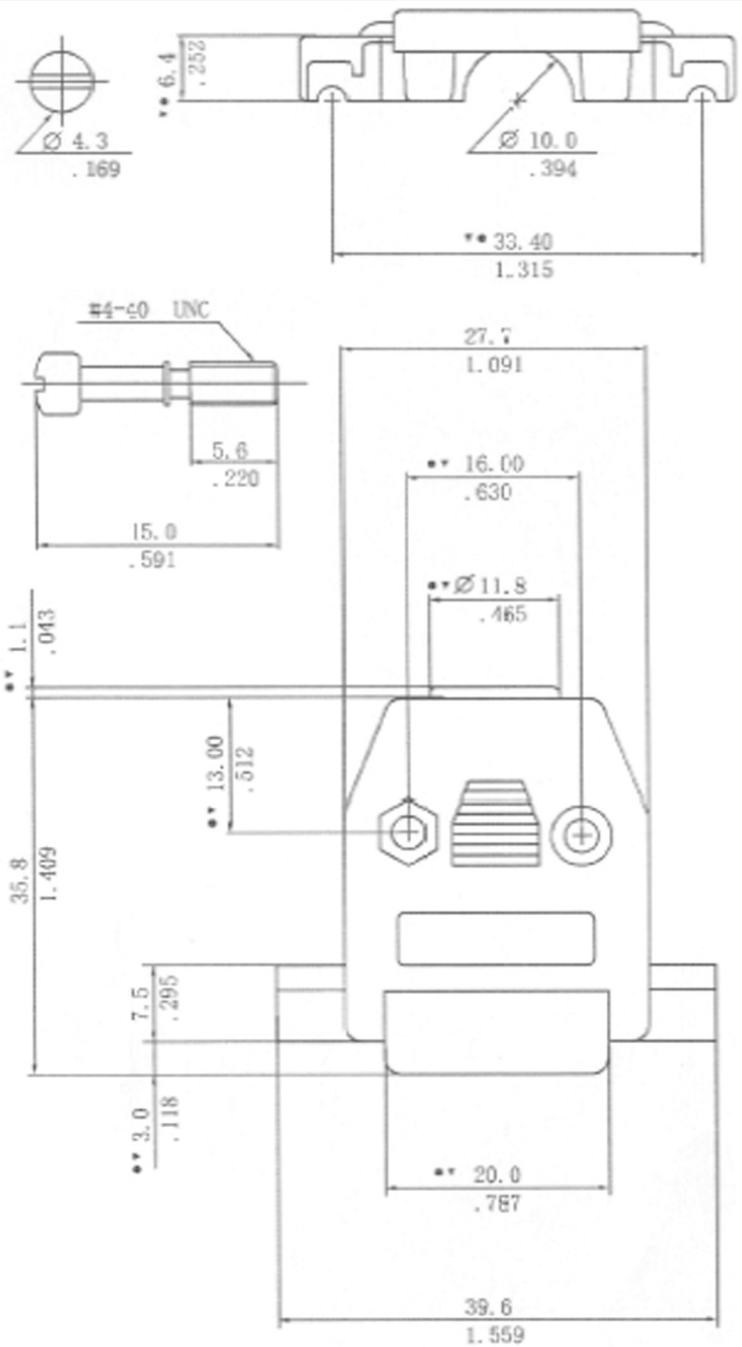

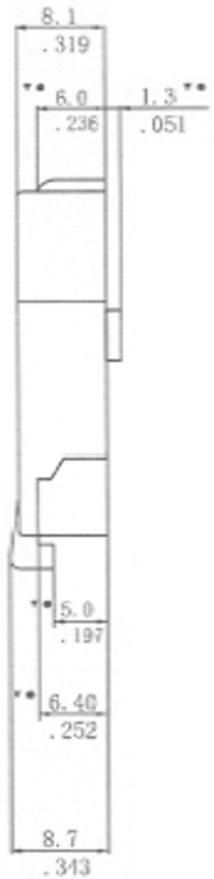

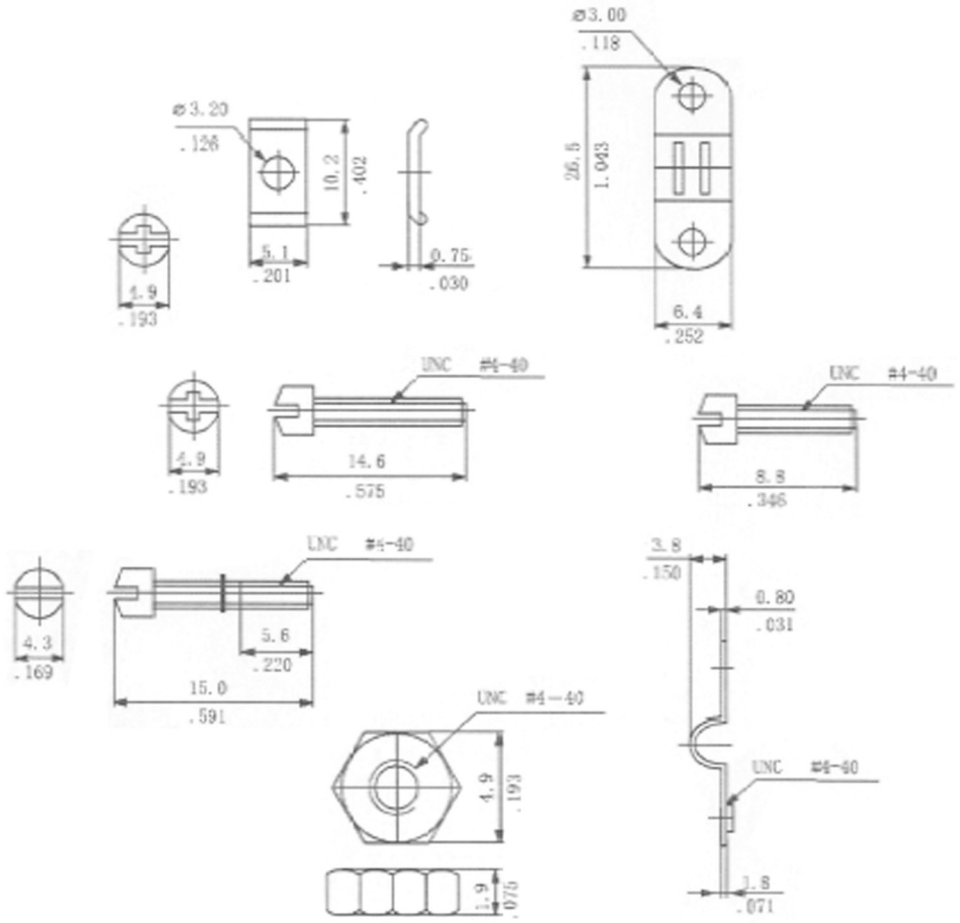

DATE 02/04/08	DRAWN AS	SCALE	MATERIAL TYPE
P/N:2360-0102-02,9WAYS,BK P/N:2360-0102-12,9WAYS,LG	APPROVED		REPLACES

encitech connectors AB

CCOV-15-SC-BLACK
CCOV-15-SC-LGREY

DRAWING No