Copyright FCI.

FCIconnect.com

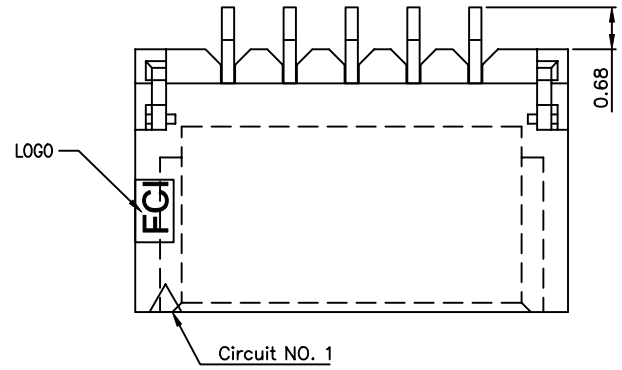

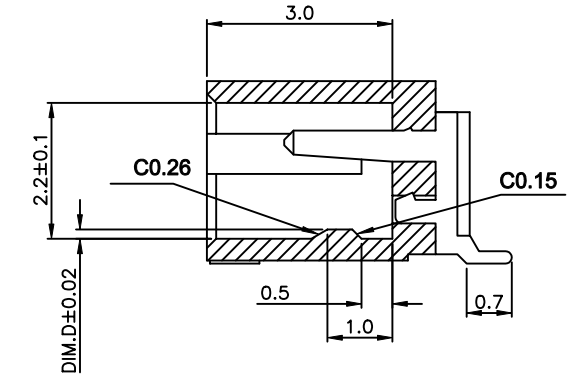

SECTION X–X

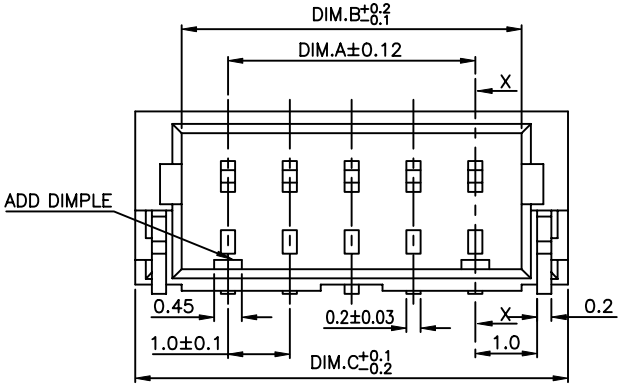

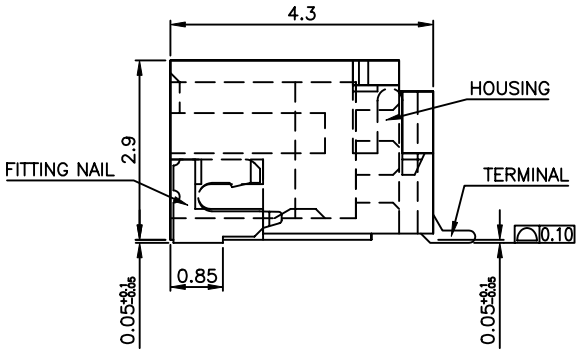

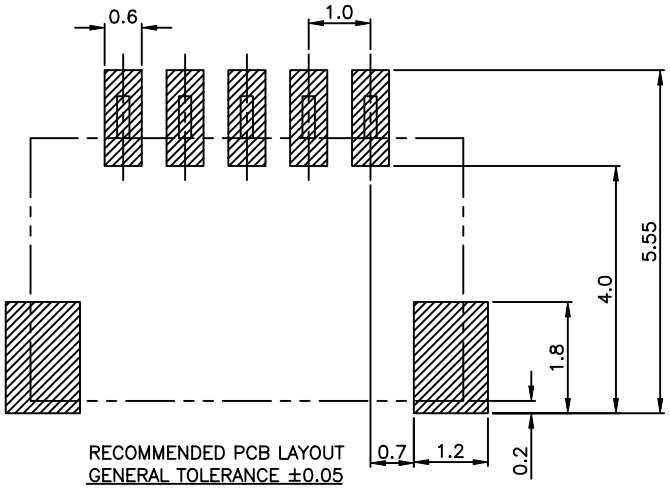

RECOMMENDED PCB LAYOUT
GENERAL TOLERANCE ±0.05

NOTES:

1. MATERIAL:
   HOUSING: HALOGEN FREE HIGH TEMPERATURE THERMOPLASTIC, UL94V–0.
   TERMINAL: COPPER ALLOY.
   FITTING NAIL: COPPER ALLOY.
2. FINISH:
   UNDER PLATING: 30~60u" NICKEL OVERALL.
   CONTACT AREA , SOLDER TAIL AND FITTING NAIL: SELECTIVE GOLD PLATED OVERALL(SEE P/N DESCRIPTION).
3. REFLOW SOLDER CAPABLE TO 260°C PEAK TEMP. FOR 10 SECONDS MAX.
4. SPEC. PLS. REFER TO GS–12–0930.
5. PACKAGE PLS. REFER TO GS–14–2103.
6. PART NUMBER DESCRIPTION:
   10116782–XXX X X X LF
   - XXX: NO OF CONTACTS(CKT)
   - X: PACKING 0: TAPE & REEL
   - X: PLATING 1: 1u" MIN. GOLD FLASH OVERALL (TERMINAL AND FITTING NAIL)
   - X: COLOR 0: BLACK
   - LF: LEAD FREE

ORDERING INFORMATION FOR USER REFERENCE

NAME		PART NO.
BOARD CONN.		10116782–XXXXXXLF
CABLE CONN.	HOUSING(WIRE SIDE)	10116783–XXXXXXLF
	TERMINAL(AWG 28~32)	10116784–XXX

CKT	Dim.A	Dim.B	Dim.C	Dim.D	CKT	Dim.A	Dim.B	Dim.C	Dim.D
002	1.0	2.4	4.0	0.20	012	11.0	12.4	14.0	0.15
003	2.0	3.4	5.0		013	12.0	13.4	15.0	0.08
004	3.0	4.4	6.0		014	13.0	14.4	16.0	
005	4.0	5.4	7.0	0.15	015	14.0	15.4	17.0	
006	5.0	6.4	8.0		016	15.0	16.4	18.0	
007	6.0	7.4	9.0		017	16.0	17.4	19.0	
008	7.0	8.4	10.0		018	17.0	18.4	20.0	
009	8.0	9.4	11.0		019	18.0	19.4	21.0	
010	9.0	10.4	12.0		020	19.0	20.4	22.0	
011	10.0	11.4	13.0		022	21.0	22.4	24.0	

mat'l. code	surface ASME Y14.5 ✓	tolerance ASME Y14.5	projection
ltr / ecn no / dr / date	tolerances unless otherwise specified		product family: WTB
A / WL / 05/11/11	angles X°±2°	linear .X ± 0.25 / .XX ± 0.15 / .XXX ± 0.10	MM [INCH]
			title: 1.0mm WTB CONN. SMT R/A S/R TYPE
	dr: WENDY CHEN 03/11/11		scale
	engr: WENDY CHEN 03/11/11		dwg no: 10116782
	chr: WENDY CHEN 03/11/11		sheet 1 of 1
	appd: GARY HSIEH 03/11/11		size: A4
sheet index / revision sheet	A / 1		type: CUSTOMER Drawing