THIS DRAWING IS UNPUBLISHED. RELEASED FOR PUBLICATION 20
© COPYRIGHT 20 BY - ALL RIGHTS RESERVED.

LOC	DIST

REVISIONS

P	LTR	DESCRIPTION	DATE	DWN	APVD
	A	FIRST VERSION	24NOV2015	G.F	S.M

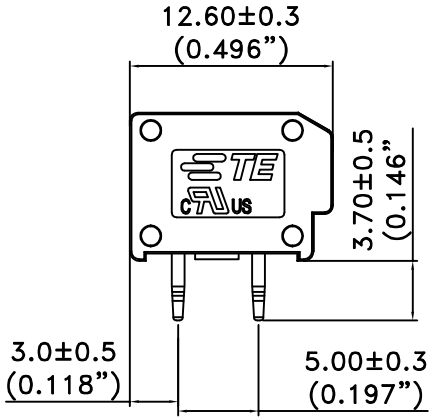

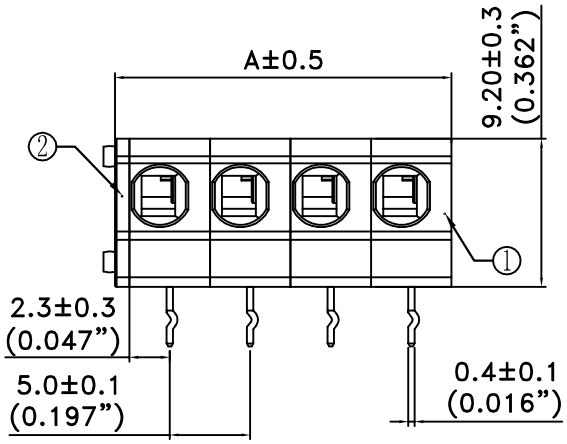

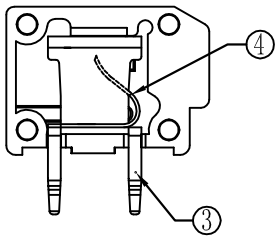

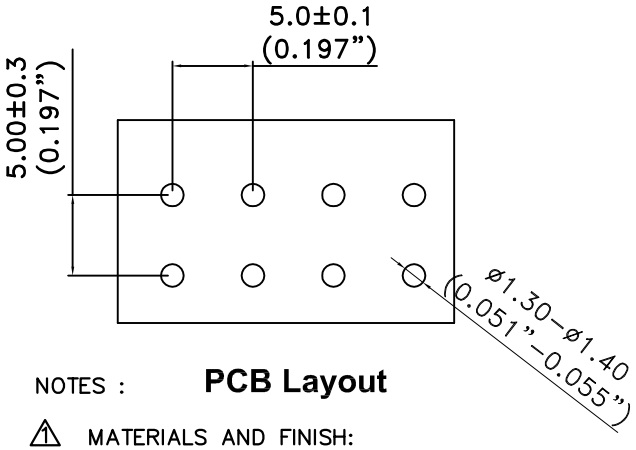

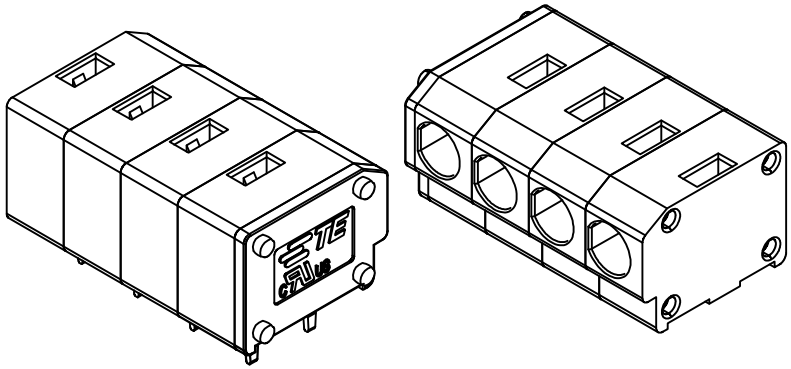

④	WIRE PROTECTOR
③	CONTACT
②	COVER
①	HOUSING

40.90	8 POSN	2834089–7
35.90	7 POSN	2834089–6
30.90	6 POSN	2834089–5
25.90	5 POSN	2834089–4
20.90	4 POSN	2834089–3
15.90	3 POSN	2834089–2
10.90	2 POSN	2834089–1
A	NO. OF POSITIONS	PART NO

NOTES : **PCB Layout**

1. MATERIALS AND FINISH:
   – HOUSING: PA66
   – CONTACTS: COPPER, FINISH: TIN OVER COPPER UNDERPLATE
2. MUST COMPLY WITH DIRECTIVE 2002/95/EC (ROHS)
3. WIRE TYPES AND SIZES ACCEPTED
   WIRE RANGE: 14AWG~20AWG.
   STRIP LENGTH: 9.0mm~10.0mm
4. PACKAGED IN TRAY.
5. CURRENT RATING: 10Amp AC300V.
6. OPERATION TEMPERATURE: –40°C TO +105°C
7. THIS PART No. IS THE SAME STRUCTURE AS THE SERIES: 2834089
   THE DATASHEET AND MORE DETAILS PLEASE FOLLOW THE SERIES: 2834089

THIS DRAWING IS A CONTROLLED DOCUMENT.

DIMENSIONS: mm

TOLERANCES UNLESS OTHERWISE SPECIFIED
0 PLC ±0.20
1 PLC ±0.15
2 PLC ±0.1
3 PLC ±
4 PLC ±
ANGLES ±2°

MATERIAL 1
FINISH 1

DWN	GEORGE FU	02DEC2015
CHK	SHI MING	02DEC2015
APVD	XU XIANG	02DEC2015
PRODUCT SPEC	108-137147	
APPLICATION SPEC	114-137147	
WEIGHT	-	

TE Connectivity

NAME: 5.0 Horizontal Entry Screwless Connector

SIZE	CAGE CODE	DRAWING NO	RESTRICTED TO
A2	00779	C-2834089	-

CUSTOMER DRAWING | SCALE 1:1 | SHEET 1 OF 1 | REV A

1471-9 (3/1D)