CASE FINISH	CURRENT (AMPS)	WORKING VOLTAGE				MAXIMUM DC RESISTANCE (OHMS)	MAXIMUM VOLTAGE DROP		MINIMUM CAPACITANCE (uF)	MIN. INSERTION LOSS PER MIL-STD-220, FULL LOAD, +25°C												
		-55°C TO +85°C		-55°C TO +125°C																		
		AC	DC	AC	DC		DC	AC		14 KHz	30 KHz	50 KHz	75 KHz	100 KHz	150 KHz	300 KHz	500 KHz	1 MHz	10 MHz	100 MHz	1 GHz	10 GHz
SOLDER	15	--	150	--	100	0.005	--	--	.5	--	4	--	--	12	--	21	--	31	48	--	70	--

08

PART MARKING:
SCI 9053-100-0002
DATE CODE

PACKAGE MARKING:

BUBBLE PACK
(PACK 50 PCS.) 08

MARKING NOTES:

N/A

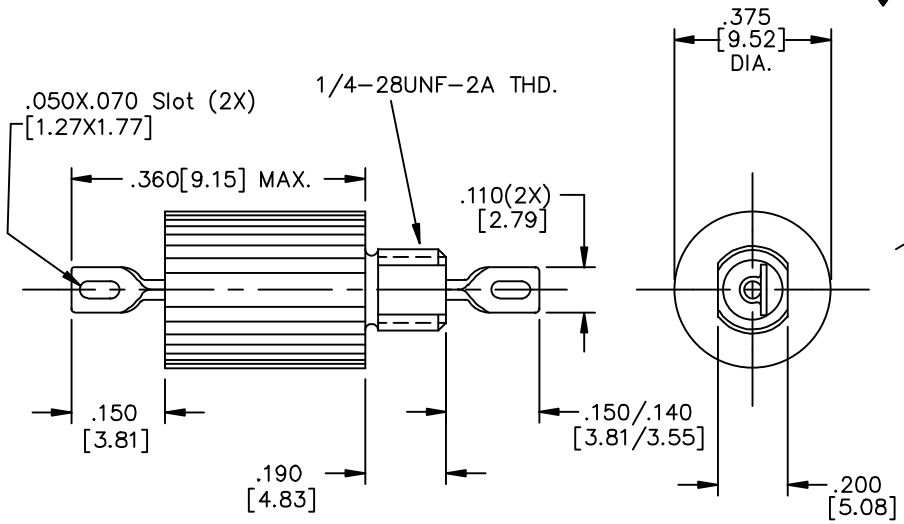

SCHEMATIC

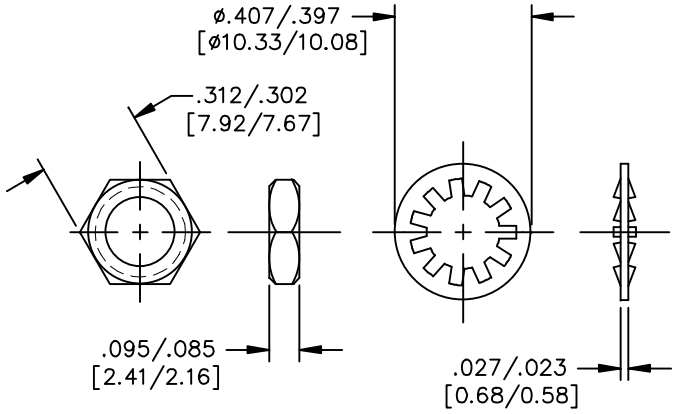

MTG. HARDWARE

NOTES:
1) MOUNTING TORQUE NOT TO EXCEED 7in-lbs.

REV. NO.	CHANGE NOTICE
8	CN 50593-ENG
7	CN 186415
6	CN 183713
	REDRAWN
5	CN 153421

UNLESS OTHERWISE SPECIFIED DIMENSIONS ARE IN INCHES. [MILLIMETERS]
DO NOT SCALE.

TOLERANCES UNLESS OTHERWISE SPECIFIED
Fractions ±
Dec. .xx±
Dec. .xxx± .010
Angles ±0° 30'
CODE IDENT. NO. 0LSP2

SPECTRUM CONTROL INC.
FAIRVIEW PENNSYLVANIA
Dwn. MAYNARD
Date 9-04-09
Sheet 1 of 1
Description Low Pass EMI Filter
9053-100-0002

Quality Products From The Specialists In Electro-Magnetic Compatibility