THIS DRAWING IS UNPUBLISHED. RELEASED FOR PUBLICATION – ,– .
© COPYRIGHT – By – ALL RIGHTS RESERVED.

LOC	DIST
G	H

REVISIONS

P	LTR	DESCRIPTION	DATE	DWN	APVD
	J1	REVISED PER ECO–11–020548	06FEB12	KH	DR

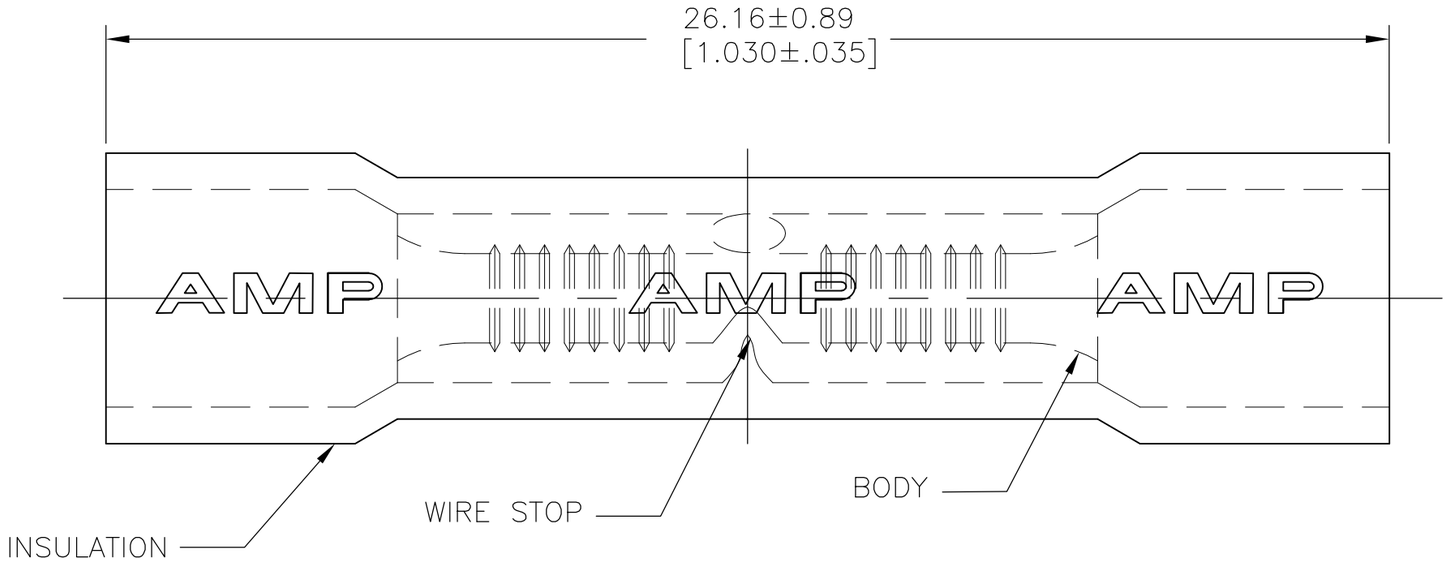

	QTY	PACKAGE TYPE	INS DIA.	MATERIAL & FINISH	PART NO
	2500	TAPE AND REEL	4.32[.170] MAX	INSULATION: PVC COLOR: RED BODY: COPPER PER ASTM B152, ANNEALED TIN PLATE PER ASTM B545	1–34243–1
	100	LOOSE PC/BOX	4.32[.170] MAX		8–34243–1
OBSOLETE	–	–	4.70[.185] MAX		1–34243–0
	1000	LOOSE PIECE	4.32[.170] MAX		34243

THIS DRAWING IS A CONTROLLED DOCUMENT.

DIMENSIONS: mm [INCHES]

TOLERANCES UNLESS OTHERWISE SPECIFIED:

0 PLC	± –
1 PLC	± –
2 PLC	± –
3 PLC	± 0.203[.008]
4 PLC	± –
ANGLES	± 5°

MATERIAL –

FINISH –

DWN KIRAN HOLAL 11JAN12
CHK ROHDE DANIEL 11JAN12
APVD ROHDE DANIEL 11JAN12
PRODUCT SPEC –
APPLICATION SPEC –
WEIGHT –

TE Connectivity

NAME
WIRE SPLICE PLASTI–GRIP–BUTT
WIRE SIZE: 22–16

SIZE	CAGE CODE	DRAWING NO	RESTRICTED TO
A3	00779	C–34243	–

CUSTOMER DRAWING

SCALE	SHEET	REV
8:1	1 OF 1	J1