THIS DRAWING IS UNPUBLISHED. RELEASED FOR PUBLICATION 534998 ,534998
© COPYRIGHT 534998By – ALL RIGHTS RESERVED.

| LOC | DIST |
|---|---|
| AD | 00 |

REVISIONS

| P | LTR | DESCRIPTION | DATE | DWN | APVD |
|---|---|---|---|---|---|
| | P7 | REVISED PER ECO-13-005565 | 02APR13 | KH | JO |

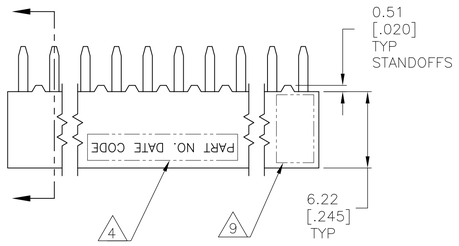


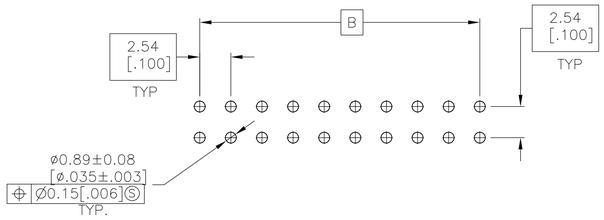


RECOMMENDED PC BOARD HOLE PATTERN
PC BOARD THICKNESS 1.57[.062]

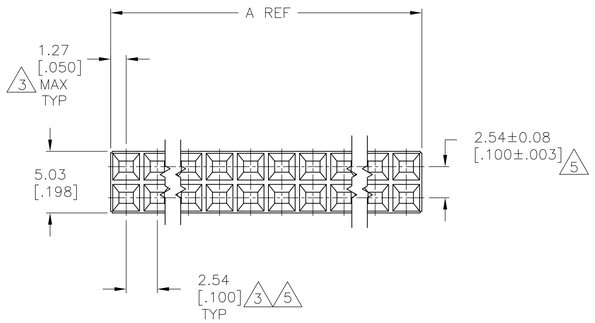


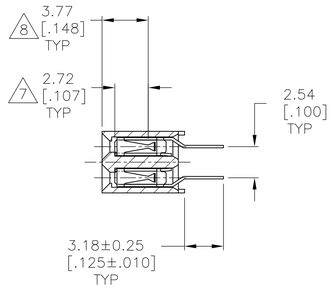


SEE SHEET 2
FOR P/N'S –51 THRU –90

| | A | B | NO OF POSN | PART NUMBER |
|---|---|---|---|---|
| 2 | 88.90 [3.500] | 91.44 [3.600] | 72 | 3-534998-6 |
| 2 | 86.36 [3.400] | 88.90 [3.500] | 70 | 3-534998-5 |
| 2 SUPERCEDED BY 8-534998-4 | 83.82 [3.300] | 86.36 [3.400] | 68 | 3-534998-4 |
| 2 | 81.28 [3.200] | 83.82 [3.300] | 66 | 3-534998-3 |
| 2 | 78.74 [3.100] | 81.28 [3.200] | 64 | 3-534998-2 |
| 2 | 76.20 [3.000] | 78.74 [3.100] | 62 | 3-534998-1 |
| 2 | 73.66 [2.900] | 76.20 [3.000] | 60 | 3-534998-0 |
| 2 | 71.12 [2.800] | 73.66 [2.900] | 58 | 2-534998-9 |
| 2 | 68.58 [2.700] | 71.12 [2.800] | 56 | 2-534998-8 |
| 2 | 66.04 [2.600] | 68.58 [2.700] | 54 | 2-534998-7 |
| 2 SUPERCEDED BY 7-534998-6 | 63.50 [2.500] | 66.04 [2.600] | 52 | 2-534998-6 |
| 2 | 60.96 [2.400] | 63.50 [2.500] | 50 | 2-534998-5 |
| 2 | 58.42 [2.300] | 60.96 [2.400] | 48 | 2-534998-4 |
| 2 | 55.88 [2.200] | 58.42 [2.300] | 46 | 2-534998-3 |
| 2 | 53.34 [2.100] | 55.88 [2.200] | 44 | 2-534998-2 |
| 2 | 50.80 [2.000] | 53.34 [2.100] | 42 | 2-534998-1 |
| 2 | 48.26 [1.900] | 50.80 [2.000] | 40 | 2-534998-0 |
| 2 | 45.72 [1.800] | 48.26 [1.900] | 38 | 1-534998-9 |
| 2 | 43.18 [1.700] | 45.72 [1.800] | 36 | 1-534998-8 |
| 2 | 40.64 [1.600] | 43.18 [1.700] | 34 | 1-534998-7 |
| 2 | 38.10 [1.500] | 40.64 [1.600] | 32 | 1-534998-6 |
| 2 | 35.56 [1.400] | 38.10 [1.500] | 30 | 1-534998-5 |
| 2 | 33.02 [1.300] | 35.56 [1.400] | 28 | 1-534998-4 |
| 2 | 30.48 [1.200] | 33.02 [1.300] | 26 | 1-534998-3 |
| 2 | 27.94 [1.100] | 30.48 [1.200] | 24 | 1-534998-2 |
| 2 | 25.40 [1.000] | 27.94 [1.100] | 22 | 1-534998-1 |
| 2 | 22.86 [.900] | 25.40 [1.000] | 20 | 1-534998-0 |
| 2 | 20.32 [.800] | 22.86 [.900] | 18 | 534998-9 |
| 2 | 17.78 [.700] | 20.32 [.800] | 16 | 534998-8 |
| 2 | 15.24 [.600] | 17.78 [.700] | 14 | 534998-7 |
| 2 | 12.70 [.500] | 15.24 [.600] | 12 | 534998-6 |
| 2 10 | 10.16 [.400] | 12.70 [.500] | 10 | 534998-5 |
| 2 10 | 7.62 [.300] | 10.16 [.400] | 8 | 534998-4 |
| 2 10 | 5.08 [.200] | 7.62 [.300] | 6 | 534998-3 |
| 2 10 | 2.54 [.100] | 5.08 [.200] | 4 | 534998-2 |
| 2 10 | – | 2.54 [.100] | 2 | 6 534998-1 |

| | B | A | NO OF POSN | PART NUMBER |
|---|---|---|---|---|
| 2 SUPERCEDED BY 9-534998-0 | 99.06 [3.900] | 101.60 [4.000] | 80 | 4-534998-0 |
| 2 | 96.52 [3.800] | 99.06 [3.900] | 78 | 3-534998-9 |
| 2 | 93.98 [3.700] | 96.52 [3.800] | 76 | 3-534998-8 |
| 2 | 91.44 [3.600] | 93.98 [3.700] | 74 | 3-534998-7 |

1. HOUSING: FLAME RETARDANT, GLASS FILLED, THERMOPLASTIC, COLOR: BLACK.
   CONTACT: PHOSPHOR BRONZE
2. CONTACT: DUPLEX PLATED 0.76µm[.000030] GOLD IN CONTACT AREA, 3.81–7.62µm[.000150–.000300] BRIGHT TIN–LEAD ON LEADS, ALL OVER 1.27µm[.000050] NICKEL
3. THESE DIMENSIONS PERTAIN TO CAVITIY CENTERLINES ONLY – NOT TO CONTACT LOCATIONS
4. PART NUMBER AND DATE CODE ARE MARKED IN APPROXIMATE LOCATION SHOWN,EITHER SIDE.
5. TOLERANCE IS NON–CUMULATIVE.
6. 2 POSITION DATE CODE IS MARKED OPPOSITE SIDE OF TE CONNECTIVITY LOGO.
7. POINT–OF–MEASUREMENT DIMENSION FOR PLATING THICKNESS (INSIDE CONTACT BEAM).
8. POINT–OF–CONTACT DIMENSION.
9. TE CONNECTIVITY TRADEMARK AND CSA LOGO ARE MOLDED INTO HOUSING, THIS LOCATION.
10. NO PART NUMBER MARKING REQUIRED FOR THIS PART.
11. CONTACT: DUPLEX PLATED 0.76µm[.000030] GOLD IN CONTACT AREA, 3.81–7.62µm[.000150–.000300] MATTE TIN ON LEADS, ALL OVER 1.27µm[.000050] NICKEL
12. ROHS 2002/95/EC COMPLIANT

THIS DRAWING IS A CONTROLLED DOCUMENT.

DIMENSIONS: mm [INCHES]

TOLERANCES UNLESS OTHERWISE SPECIFIED:
0 PLC ± –
1 PLC ± –
2 PLC ± 0.13[.005]
3 PLC ± –
4 PLC ± –
ANGLES ± –

MATERIAL 1
FINISH 2

| | | |
|---|---|---|
| DWN | M.BINNER | 06NOV02 |
| CHK | J.OLSON | 06NOV02 |
| APVD | J.OLSON | 06NOV02 |

PRODUCT SPEC 108–25022
APPLICATION SPEC 114–25018
WEIGHT –

TE Connectivity

NAME: RECEPTACLE ASSEMBLY, MOD IV, DOUBLE ROW, DUAL ENTRY, .100X.100CL, VERTICAL MOUNT, AMPMODU

| SIZE | CAGE CODE | DRAWING NO | RESTRICTED TO |
|---|---|---|---|
| A1 | 00779 | C-534998 | – |

CUSTOMER DRAWING | SCALE 4:1 | SHEET 1 OF 2 | REV P7

THIS DRAWING IS UNPUBLISHED. RELEASED FOR PUBLICATION 534998 ,534998
© COPYRIGHT 534998By – ALL RIGHTS RESERVED.

| LOC | DIST |
|---|---|
| AD | 00 |

REVISIONS

| P | LTR | DESCRIPTION | DATE | DWN | APVD |
|---|---|---|---|---|---|
| | – | SEE SHEET 1 | – | – | – |

| | | | | |
|---|---|---|---|---|
| 12 11 | 88.90 [3.500] | 91.44 [3.600] | 72 | 8–534998–6 |
| 12 11 | 86.36 [3.400] | 88.90 [3.500] | 70 | 8–534998–5 |
| 12 11 | 83.82 [3.300] | 86.36 [3.400] | 68 | 8–534998–4 |
| 12 11 | 81.28 [3.200] | 83.82 [3.300] | 66 | 8–534998–3 |
| 12 11 | 78.74 [3.100] | 81.28 [3.200] | 64 | 8–534998–2 |
| 12 11 | 76.20 [3.000] | 78.74 [3.100] | 62 | 8–534998–1 |
| 12 11 | 73.66 [2.900] | 76.20 [3.000] | 60 | 8–534998–0 |
| 12 11 | 71.12 [2.800] | 73.66 [2.900] | 58 | 7–534998–9 |
| 12 11 | 68.58 [2.700] | 71.12 [2.800] | 56 | 7–534998–8 |
| 12 11 | 66.04 [2.600] | 68.58 [2.700] | 54 | 7–534998–7 |
| 12 11 | 63.50 [2.500] | 66.04 [2.600] | 52 | 7–534998–6 |
| 12 11 | 60.96 [2.400] | 63.50 [2.500] | 50 | 7–534998–5 |
| 12 11 | 58.42 [2.300] | 60.96 [2.400] | 48 | 7–534998–4 |
| 12 11 | 55.88 [2.200] | 58.42 [2.300] | 46 | 7–534998–3 |
| 12 11 | 53.34 [2.100] | 55.88 [2.200] | 44 | 7–534998–2 |
| 12 11 | 50.80 [2.000] | 53.34 [2.100] | 42 | 7–534998–1 |
| 12 11 | 48.26 [1.900] | 50.80 [2.000] | 40 | 7–534998–0 |
| 12 11 | 45.72 [1.800] | 48.26 [1.900] | 38 | 6–534998–9 |
| 12 11 | 43.18 [1.700] | 45.72 [1.800] | 36 | 6–534998–8 |
| 12 11 | 40.64 [1.600] | 43.18 [1.700] | 34 | 6–534998–7 |
| 12 11 | 38.10 [1.500] | 40.64 [1.600] | 32 | 6–534998–6 |
| 12 11 | 35.56 [1.400] | 38.10 [1.500] | 30 | 6–534998–5 |
| 12 11 | 33.02 [1.300] | 35.56 [1.400] | 28 | 6–534998–4 |
| 12 11 | 30.48 [1.200] | 33.02 [1.300] | 26 | 6–534998–3 |
| 12 11 | 27.94 [1.100] | 30.48 [1.200] | 24 | 6–534998–2 |
| 12 11 | 25.40 [1.000] | 27.94 [1.100] | 22 | 6–534998–1 |
| 12 11 | 22.86 [.900] | 25.40 [1.000] | 20 | 6–534998–0 |
| 12 11 | 20.32 [.800] | 22.86 [.900] | 18 | 5–534998–9 |
| 12 11 | 17.78 [.700] | 20.32 [.800] | 16 | 5–534998–8 |
| 12 11 | 15.24 [.600] | 17.78 [.700] | 14 | 5–534998–7 |
| 12 11 | 12.70 [.500] | 15.24 [.600] | 12 | 5–534998–6 |
| 12 11 10 | 10.16 [.400] | 12.70 [.500] | 10 | 5–534998–5 |
| 12 11 10 | 7.62 [.300] | 10.16 [.400] | 8 | 5–534998–4 |
| 12 11 10 | 5.08 [.200] | 7.62 [.300] | 6 | 5–534998–3 |
| 12 11 10 | 2.54 [.100] | 5.08 [.200] | 4 | 5–534998–2 |
| 12 11 10 | – | 2.54 [.100] | 2 | 6 5–534998–1 |
| | B | A | NO OF POSN | PART NUMBER |

| | | | | |
|---|---|---|---|---|
| 12 11 | 99.06 [3.900] | 101.60 [4.000] | 80 | 9–534998–0 |
| 12 11 | 96.52 [3.800] | 99.06 [3.900] | 78 | 8–534998–9 |
| 12 11 | 93.98 [3.700] | 96.52 [3.800] | 76 | 8–534998–8 |
| 12 11 | 91.44 [3.600] | 93.98 [3.700] | 74 | 8–534998–7 |
| | B | A | NO OF POSN | PART NUMBER |

THIS DRAWING IS A CONTROLLED DOCUMENT.

DIMENSIONS: mm [INCHES]

TOLERANCES, UNLESS OTHERWISE SPECIFIED:
0 PLC ± –
1 PLC ± –
2 PLC ± 0.13[.005]
3 PLC ± –
4 PLC ± –
ANGLES ± –

MATERIAL 1

FINISH 2

| | | |
|---|---|---|
| DWN | M.BINNER | 06NOV02 |
| CHK | J.OLSON | 06NOV02 |
| APVD | J.OLSON | 06NOV02 |

PRODUCT SPEC 108–25022

APPLICATION SPEC 114–25018

WEIGHT –

TE Connectivity

NAME RECEPTACLE ASSEMBLY, MOD IV, DOUBLE ROW, DUAL ENTRY, .100X.100CL, VERTICAL MOUNT, AMPMODU

| SIZE | CAGE CODE | DRAWING NO | RESTRICTED TO |
|---|---|---|---|
| A1 | 00779 | C–534998 | – |

CUSTOMER DRAWING

| SCALE | SHEET | REV |
|---|---|---|
| 4:1 | 2 OF 2 | P7 |