THIS DRAWING IS UNPUBLISHED. RELEASED FOR PUBLICATION DEC 2004
VERAEUSSERUNGSUNTERSTAETTENDE ZEICHNUNG FREI FUER VEROEFFENTLICHUNG
© COPYRIGHT 2004 BY TYCO ELECTRONICS CORPORATION. ALL RIGHTS RESERVED. ALLE RECHTE VORBEHALTEN.

MATED WITH: PASSEND ZU:

LOC	DIST
A1	–

PROJEKT NR.: EGGMN030ZB

REVISIONS
AENDERUNGEN

P	LTR	DESCRIPTION BESCHREIBUNG	DATE	DWN	APVD
	C1	PCN-10-001404	06APR2010	–	–
	D	ECR-10-012464	29SEP10	RK	KMA
	E	REVISED PER ECO-12-000073	29FEB2012	CJV	SLB

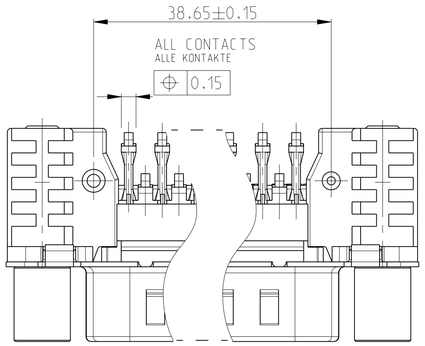

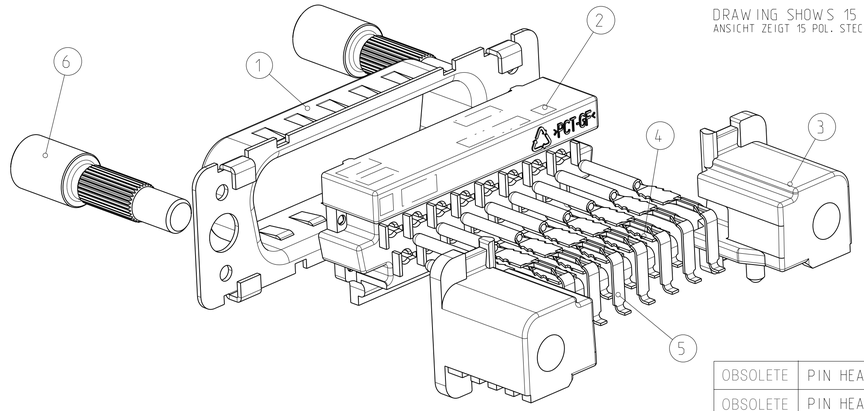

DRAWING SHOWS 15 POS. CONNECTOR
ANSICHT ZEIGT 15 POL. STECKER

OBSOLETE	PIN HEADER, 25 POS., STUD WITH THREAD M3	4-1740199-2	4-1740199-5
OBSOLETE	PIN HEADER, 25 POS., BRACKET WITH THREAD M3	2-1740199-2	2-1740199-5
	PIN HEADER, 25 POS., STUD WITH THREAD UNC 4-40	3-1740199-2	3-1740199-5
	PIN HEADER, 25 POS., BRACKET WITH THREAD UNC4-40	1-1740199-2	1-1740199-5
OBSOLETE	PIN HEADER, 25 POS., BRACKET WITH HOLE Ø3.1	0-1740199-2	0-1740199-5
	DESCRIBTION	SHELL PLATING: TIN OVER Ni	SHELL PLATING: Ni

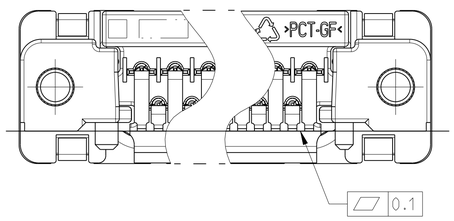

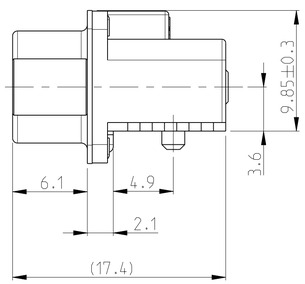

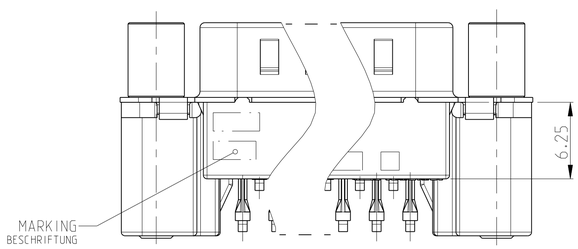

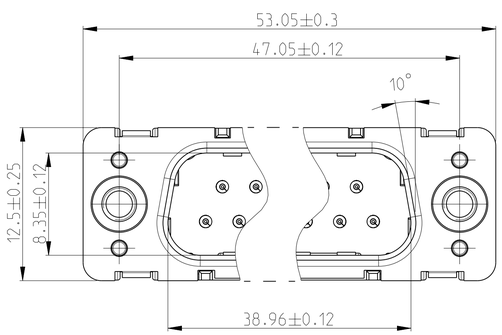

RECOMMENDED PC BOARD LAYOUT
EMPFOHLENES LEITERPLATTENBILD

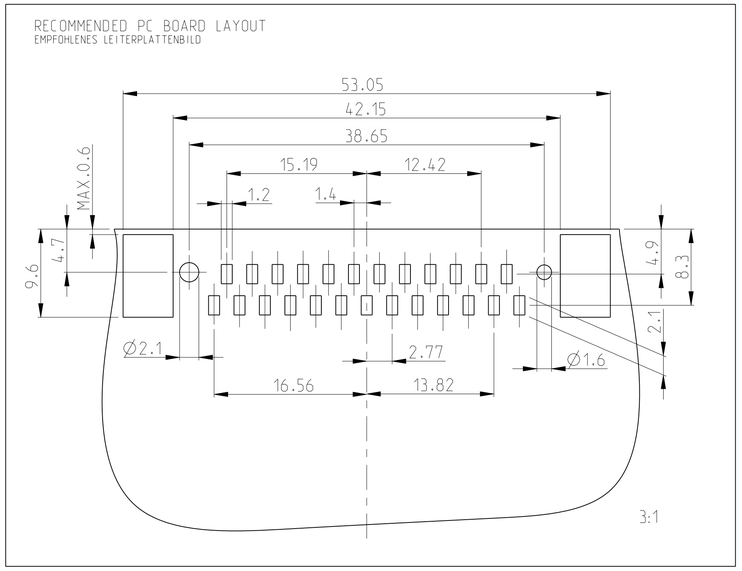

REMARKS:

1. CONTACT AREA: min. 0.8 µm Au OVER 1.27 µm Ni.
   SOLDER AREA: 3-5 µm Sn OVER min. 1.27 µm Ni
2. PACKAGING SEE SHEET 2
3. CONNECTOR SUITABLE TO LEAD-FREE SMT SOLDER PROCESS
4. TIN OVER NICKEL

BEMERKUNGEN:

1. KONTAKTBEREICH: min. 0.8 µm Au UEBER 1.27 µm Ni.
   LOETBEREICH: 3-5 µm Sn UEBER min. 1.27 µm Ni
2. VERPACKUNGSART SIEHE BLATT 2
3. STECKER GEEIGNET FUER BLEIFREIES LOETEN
4. ZINN UEBER NICKEL

POS.	QTY.	DESCRIPTION BENENNUNG	SURFACE OBERFLAECHE / COLOUR/FARBE	MATERIAL
6	2	THREAD STUD GEWINDEBOLZEN	NICKEL NICKEL	STEEL STAHL
5	13	PIN CONTACT, SMD, LONG STIFTKONTAKT, SMD, LANG	1	CuMg
4	12	PIN CONTACT, SMD, SHORT STIFTKONTAKT, SMD, KURZ	1	CuMg
3	2	BRACKET, SMD, LEFT/RIGHT WINKELSTUECK, SMD, LINKS/RECHTS	4	CAST METAL DRUCKGUSS
2	1	PIN HOUSING STIFTGEHAEUSE	BLACK SCHWARZ	PCT-GF
1	1	SHELL SCHIRMBLECH	SEE TABLE SIEHE TABELLE	STEEL STAHL

THIS DRAWING IS A CONTROLLED DOCUMENT FOR TYCO ELECTRONICS CORPORATION. IT IS SUBJECT TO CHANGE. ALL DOCUMENTS MUST BE CONSIDERED. ORGANIZATION SHOULD BE CONTACTED FOR THE LATEST REVISION.
DIESES ZEICHNUNGSDOKUMENT WIRD DURCH AMP-INCORPORATED KONTROLLIERT. ANDERUNGEN, DIE DEM TECHNISCHEN FORTSCHRITT DIENEN, SIND VORBEHALTEN. DEN ZWECK LETZTAUFLIGEN ANDERUNGSSTAND ERFAHREN SIE AUF ANFRAGE.

DIMENSIONS: MASSEINHEITEN: mm

TOLERANCES UNLESS OTHERWISE SPECIFIED: ALLGEMEINTOLERANZEN
0 PLC ±
1 PLC ±
2 PLC ± 0.2
3 PLC ±
4 PLC ±
ANGLES/WINKEL ±4°

MATERIAL: SEE TABLE / S.TABELLE
FINISH/OBERFLAECHE/FARBE: SEE TABLE / S.TABELLE

DWN	L.SCHLUETER	30NOV2004
CHK	M.SCHAARSCHMIDT	01DEC2004
APVD	G.FELDMEIER	01DEC2004

PRODUCT SPEC: PRODUKTSPEC. 108-94000
APPLICATION SPEC: VERARBEITUNGSSPEZ. –
WEIGHT: GEWICHT –

Tyco Electronics
Tyco Electronics AMP GmbH
64625 Bensheim (Germany)

NAME: HDP20 PIN HEADER, SMT, 25 POS.
HDP20 STIFTLEISTE, SMT, 25 POL.
EUROSTYLE

SIZE	CAGE CODE	DRAWING NO ZEICHNUNGS-NR.	RESTRICTED TO NUR FUER
A1	00779	C-1740199	–

CUSTOMER DRAWING /KUNDENZEICHNUNG | SCALE MASSSTAB 5:1 | SHEET BLATT 1 OF VON 2 | REV E

AMP 4805 REV 31MAR2000

Pro/ENGINEER DRAWING

THIS DRAWING IS UNPUBLISHED. RELEASED FOR PUBLICATION 2004
© COPYRIGHT 2004 BY TYCO ELECTRONICS CORPORATION. ALL RIGHTS RESERVED.

LOC	DIST
A1	-

REVISIONS

P	LTR	DESCRIPTION	DATE	DWN	APVD
	-	SEE SHEET 1	-	-	-

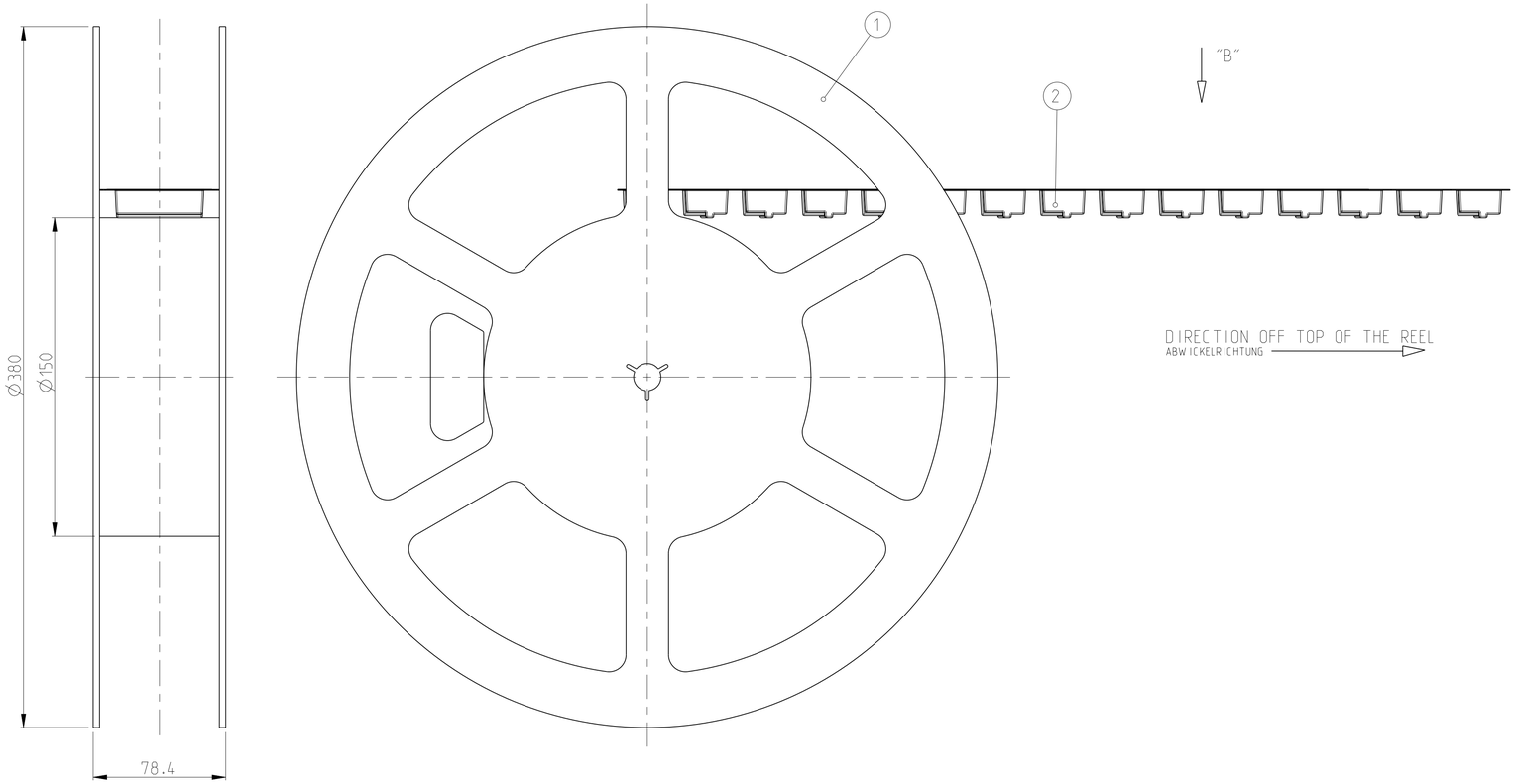

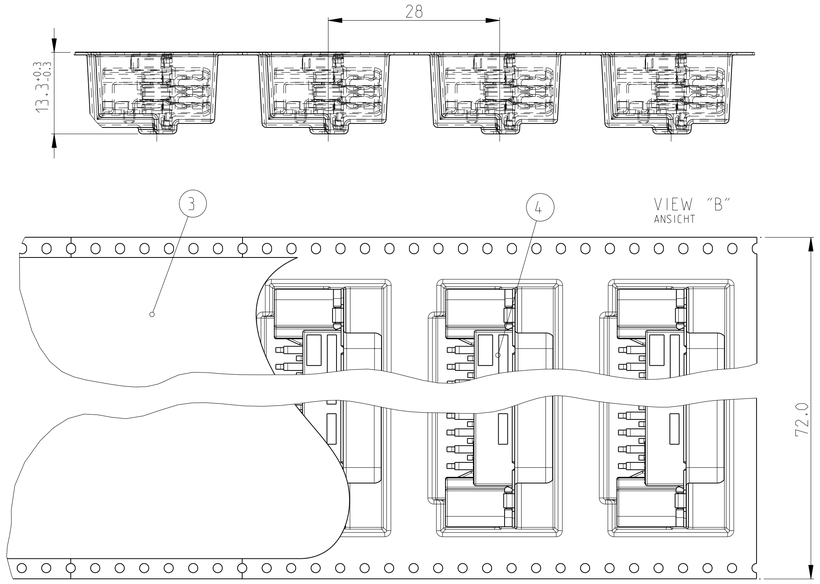

M2:1

REMARKS:

1. COVER TAPE WITH BLISTER BELT WELDED OR PASTED
2. BLISTER BELT, COVER AND TAPE ACC. TO DIN/IEC 286 PART 3
3. FIRST AND LAST RUNNING OF THE CARRIER TAPE ACC. TO DIN/IEC 286 PART 3
4. 6.4m BLISTERBELT AND 6.5m COVER TAPE, 200 LOOSE PIECE PARTS

BEMERKUNGEN:

1. ABDECKBAND MIT BLISTERGURT VERSCHWEISST ODER VERKLEBT
2. BLISTERGURT, ABDECKBAND UND REEL NACH DIN/IEC 286 TEIL 3
3. VOR- UND NACHLAUF AM BLISTERGURT NACH DIN/IEC 286 TEIL 3
4. 6.4m BLISTERGURT UND 6.5m ABDECKBAND, 200 EINZELTEILE

TE ORDER NO. BESTELL-NR.	POS.	4-1740199-2	3-1740199-2	2-1740199-2	1-1740199-2	0-1740199-2	DESCRIPTION BENENNUNG	SURFACE OBERFLAECHE / COLOUR/FARBE	MATERIAL
		4-1740199-5	3-1740199-5	2-1740199-5	1-1740199-5	0-1740199-5			
		OBSOLETE		OBSOLETE		OBSOLETE			
1740199	4	200	-	-	-	-	SUB-D PIN HEADER, 25 POS., STUD M3 SUB-D STIFTSTECKER, 25 POL., BOLZEN M3	-	-
	4	-	200	-	-	-	SUB-D PIN HEADER, 25 POS., STUD UNC4-40 SUB-D STIFTSTECKER, 25 POL., BOLZEN UNC4-40	-	-
	4	-	-	200	-	-	SUB-D PIN HEADER, 25 POS., M3 SUB-D STIFTSTECKER, 25 POL., M3	-	-
	4	-	-	-	200	-	SUB-D PIN HEADER, 25 POS., UNC4-40 SUB-D STIFTSTECKER, 25 POL., UNC4-40	-	-
	4	-	-	-	-	200	SUB-D PIN HEADER, 25 POS. SUB-D STIFTSTECKER, 25 POL.	-	-
	3	6.5m	6.5m	6.5m	6.5m	6.5m	COVER BELT FOR BLISTER BELT ABDECKBAND FUER BLISTERGURT	TRANSPARENT	PET
	2	6.4m	6.4m	6.4m	6.4m	6.4m	BLISTER BELT BLISTERGURT	GREY/BLACK GRAU/SCHWARZ	PS
	1	1	1	1	1	1	REEL SPULE	GREY GRAU	PS

THIS DRAWING IS A CONTROLLED DOCUMENT FOR TYCO ELECTRONICS CORPORATION. IT IS SUBJECT TO CHANGE AND THE CONTROLLING ENGINEERING ORGANIZATION SHOULD BE CONTACTED FOR THE LATEST REVISION.

DIMENSIONS: mm

TOLERANCES UNLESS OTHERWISE SPECIFIED:
0 PLC ±
1 PLC ±
2 PLC ±
3 PLC ±
4 PLC ±
ANGLES ±1°

MATERIAL: SEE TABLE / S.TABELLE
FINISH: SEE TABLE / S.TABELLE

DWN: L.SCHLUETER 30NOV2004
CHK: M.SCHAARSCHMIDT 01DEC2004
APVD: G.FELDMEIER 01DEC2004
PRODUCT SPEC: 108-94000
APPLICATION SPEC: -
WEIGHT: -

Tyco Electronics
Tyco Electronics AMP GmbH
64625 Bensheim (Germany)

NAME: HDP20 PIN HEADER, SMT, 25 POS.
HDP20 STIFTLEISTE, SMT, 25 POL.
EUROSTYLE

SIZE	CAGE CODE	DRAWING NO	RESTRICTED TO
A1	00779	C-1740199	-

CUSTOMER DRAWING | SCALE 5:1 | SHEET 2 OF 2 | REV E