THIS DRAWING IS UNPUBLISHED. RELEASED FOR PUBLICATION -,- .
© COPYRIGHT - By - ALL RIGHTS RESERVED.

LOC	DIST
AF	50

REVISIONS

P	LTR	DESCRIPTION	DATE	DWN	APVD
	N	REVISED PER ECR-12-013445	18OCT12	KH	PD

1. CONTINUOUS STRIP ON REELS.
2. WIRE SIZE [#24-#22] AWG.
3. INSULATION RANGE 1.02-1.52 [.040-.060] DIA.
4. MATING TAB THK 0.51±0.025 [.020±.001].
5. FEED TO BE 17.91±0.13 [.705±.005].

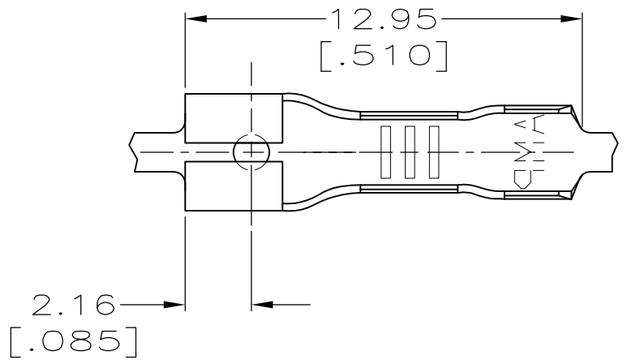

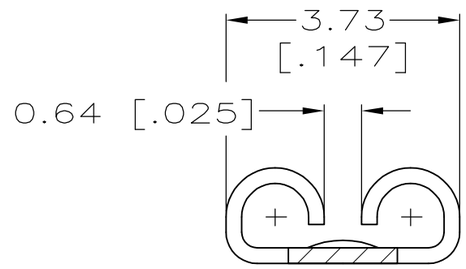

VIEW A-A
SCALE 10:1

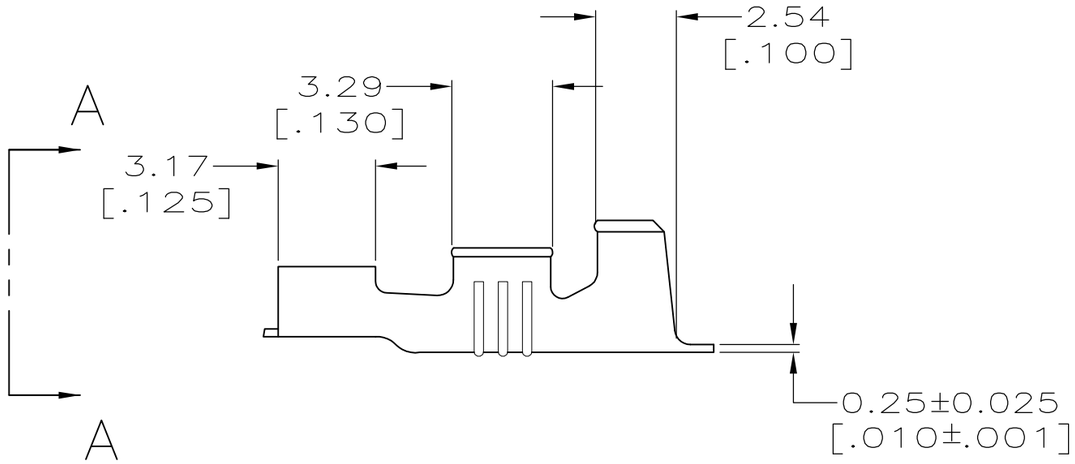

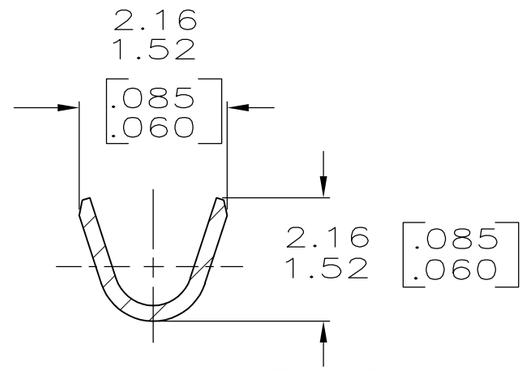

SECTION B-B
SCALE 10:1

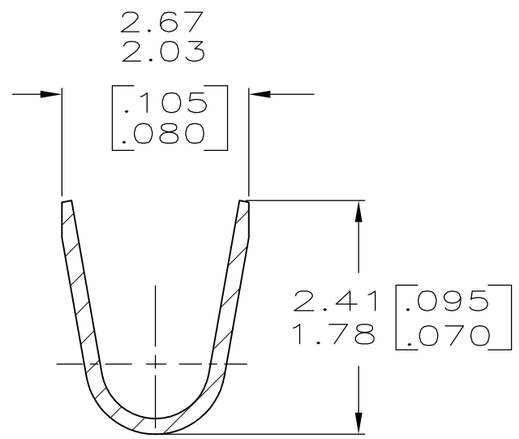

SECTION C-C
SCALE 10:1

60089-2

PART NO

THIS DRAWING IS A CONTROLLED DOCUMENT.

DIMENSIONS: mm [INCHES]

TOLERANCES UNLESS OTHERWISE SPECIFIED:

0 PLC	± -
1 PLC	± -
2 PLC	± 0.38 [.015]
3 PLC	± -
4 PLC	± -
ANGLES	± -

MATERIAL: BRASS

FINISH: PRE-TIN

DWN	JR RUTH	2/7/96
CHK	MS FEHER	2/7/96
APVD	P DESANTIS	2/7/96
PRODUCT SPEC	—	
APPLICATION SPEC	—	
WEIGHT	—	

TE Connectivity

NAME: RECEPTACLE, FASTON, 2.79 [.110] SERIES

SIZE	CAGE CODE	DRAWING NO	RESTRICTED TO
A3	00779	C-60089	—

CUSTOMER DRAWING

SCALE	SHEET	REV
5:1	1 OF 1	N