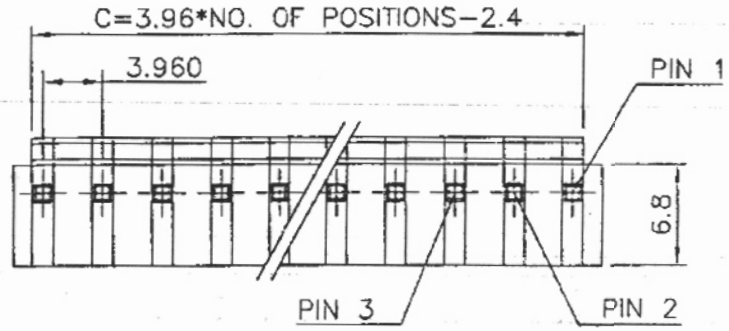

Material and Finish:
1.Insulator Material: Nylon 66,UL94V-0,Color:White
2.Contact Material: Brass
3.Contact Plated: Tin Plated
4.Current Rating: 7A AC/DC
5.Voltage Rating: 250V AC Maimum
6.Contact Resistance: 20 mohm Max.
7.Insulation Resistance: 1000 Mohm Min.
8.Dielectric Withstanding Voltage: 1500V AC/minute
9.Operating Temperature: -25°C to +85°C
10.RO = RoHS

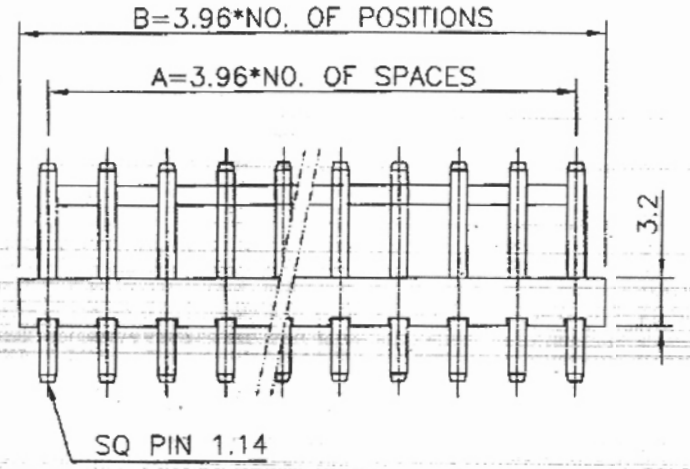

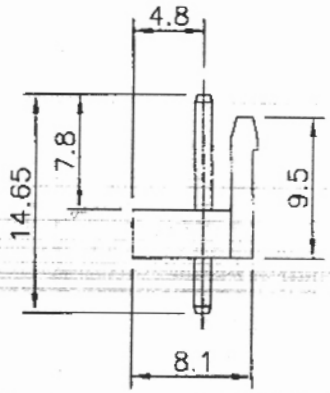

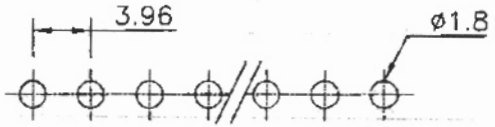

RECOMMENDED PCB LAYOUT

PART NO.	TITLE	A	B	C
13500100	PMT-02ST-RO	3.96	7.92	5.52
13500110	PMT-05ST-RO	15.84	19.80	17.4
13500140	PMT-03ST-RO	7.92	11.88	9.48
13500150	PMT-04ST-RO	11.88	15.84	13.44
13500130	PMT-06ST-RO	19.80	23.76	21.36

大衛電子股份有限公司 David Electronics Co., Ltd.
發行 95.6.14 日期
發行
文件管制中心

REV.	DESCRIPTION	DATE	REV.	DESCRIPTION	DATE
A1	ECN-0606071	06/14/'06			
A0	ECN-0604167,ECN-0604171	04/26/'06			

UNLESS OTHERWISE SPECIFIED TOLERANCE

ANG.	±
.0	±0.25
.00	±0.15
.000	±0.05

SCALE: NONE UNIT: mm
DRAWN: 6/14/06
CHECKED: 6/14/06
APPROVED: 6/14/06
SIZE A4 REV. A1

大衛電子股份有限公司
David Electronics Co., Ltd.
TEL:886-2-8647-1376 FAX:886-2-8647-1377
大欣電子五金廠(深圳)
T.D.C. Electronic & Metal Factory
TEL:86 755-2768 2800 FAX:86 755-2708 2505

APPLICATION NO.: ECN-0604167,ECN-0604171
DRAWN NAME: PMT-XXST-RO
PRODUCT NO.: 1350XXXX
FILE NAME: 2-612