THIS DRAWING IS UNPUBLISHED. RELEASED FOR PUBLICATION -,- .
© COPYRIGHT - BY TYCO ELECTRONICS CORPORATION. ALL RIGHTS RESERVED.

LOC	DIST
AA	22

REVISIONS

P	LTR	DESCRIPTION	DATE	DWN	APVD
	A	REV PER EC 0S11-0201-04	13JUN2005	JA	SF
	A1	REVISED PER ECO-09-024927	09NOV09	KK	AEG

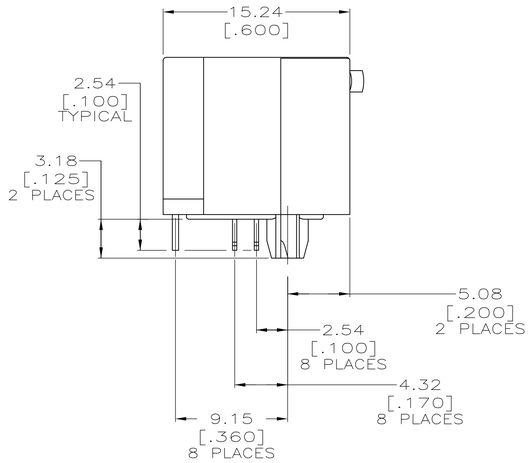

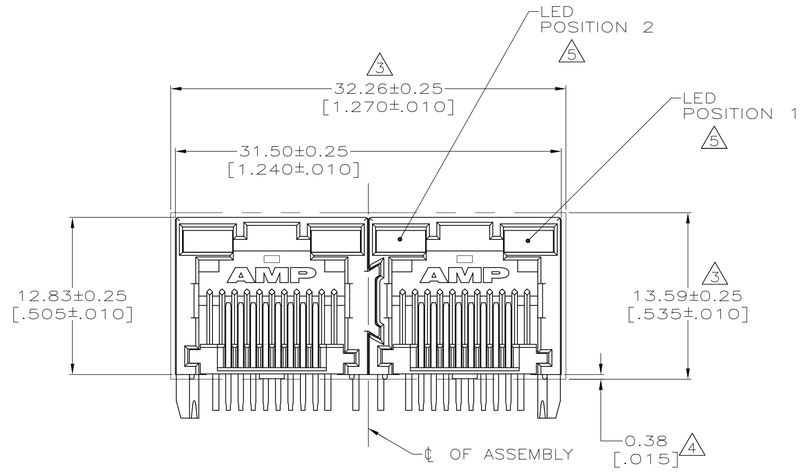

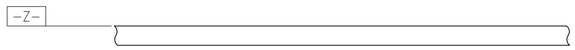

1. MATERIAL:
HOUSING – HIGH TEMPERATURE THERMOPLASTIC, BLACK, UL94V-0.
TERMINALS – .36[.014] THICK PHOS BRONZE PLATED WITH 3.81μm[.000150] MINIMUM THICK MATTE TIN IN SOLDER AREA. 1.27μm [.000050] MINIMUM GOLD IN LOCALIZED PLATE AREA. ENTIRE TERMINAL PLATED WITH 1.27μm [.000050] MINIMUM THICK NICKEL.
LIGHT EMITTING DIODE (LED) – DIFFUSED EPOXY LENS, 0.51 x 0.51[.020 x .020] CARBON STEEL WIREFRAME LEADS PREPLATED WITH 8.89 μm[.0003500] THICK Sn/Cu OVER 2.03 μm[.000080] THICK Ag OVER 1.02μm[.000040] THICK Cu OVER 3.56 μm[.000140] THICK Ni OVER 1.02μm[.000040] Cu UNDERPLATE

2. JACK CAVITY CONFORMS TO FCC RULES AND REGULATIIONS PART 68, SUBPART F.

3. SUGGESTED PANEL OPENING DIMENSIONS.

4. SUGGESTED CLEARANCE BETWEEN BOTTOM OF CONNECTOR AND BOTTOM PANEL OPENING.

5. SEE TABLE FOR COLOR OF LEDS AND NUMBER REQUIRED.

6. THIS MODULAR JACK WITH INTEGRATED LED IS NOT IR REFLOW SOLDERING PROCESS COMPATIBLE.

7. OBSOLETE PARTS: OBSOLETE CIS STREAMLINING PER D.RENAUD/D.SINISI

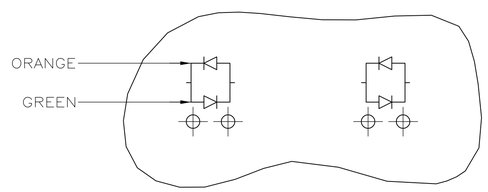

7 OBSOLETE ~~5406534-7~~ ONLY

LED CURRENT DIAGRAM

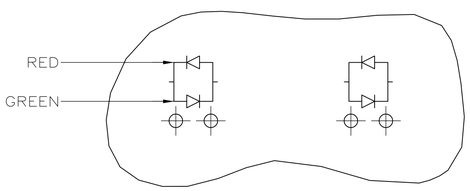

7 OBSOLETE ~~2-5406534-4~~ ONLY

LED CURRENT DIAGRAM

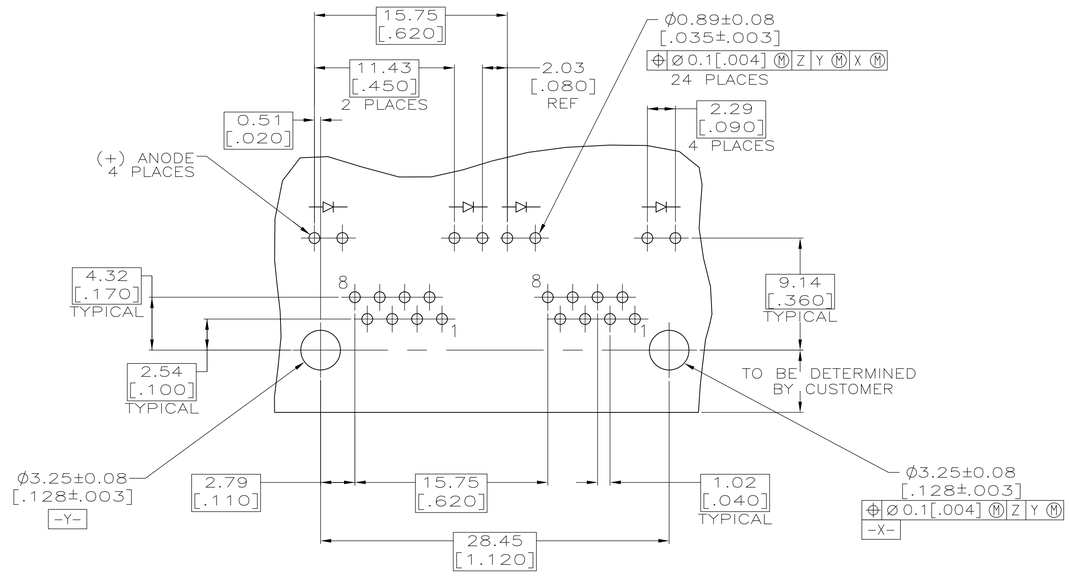

SUGGESTED PRINTED CIRCUIT BOARD LAYOUT
(COMPONENT SIDE)

OBSOLETE 7	GREEN/RED	GREEN/RED	~~2-5406534-4~~
	ORANGE/GREEN	ORANGE/GREEN	~~5406534-7~~
	YELLOW	YELLOW	~~5406534-6~~
	GREEN	GREEN	~~5406534-5~~
	YELLOW	–	~~5406534-3~~
	–	GREEN	5406534-2
	POSITION 2	POSITION 1	PART NUMBER
	INDICATOR COLOR FOR EACH HOUSING		

THIS DRAWING IS A CONTROLLED DOCUMENT.

DIMENSIONS: mm [INCHES]

TOLERANCES UNLESS OTHERWISE SPECIFIED:
0 PLC ± –
1 PLC ± –
2 PLC ± 0.25[.01]
3 PLC ± 0.13[.005]
4 PLC ± –
ANGLES ± –

MATERIAL 7 FINISH 7

DWN 13JUN2005 J. ALCORTA – DOCK5
CHK 13JUN2005 J. WESTMAN
APVD 13JUN2005 S. FLICKINGER
PRODUCT SPEC 108-1163-4
APPLICATION SPEC 114-2154
WEIGHT –

Tyco Electronics
Tyco Electronics Corporation
Harrisburg, Pa 17105-3608

NAME: INVERTED MODULAR JACK ASSEMBLY, 1X2, LED

SIZE	CAGE CODE	DRAWING NO	RESTRICTED TO
A1	00779	C-5406534	–

CUSTOMER DRAWING | SCALE 1:1 | SHEET 1 OF 1 | REV A1