Table of Contents

Part Number Guide 2
Fan Selection Guide 3
AC Fans 4
AC Impellers 26
DC Fans 28
DC Fans - High Value Challenger 60
Special Function Information 61
Fan Trays - Thermalcare AC/DC 62
Blowers 66
Fan Filter 69
Fan Guards 70
Fan Cords 71
AC Power Cords 72

Cross Reference 81

Note 1: The drawings and photos featured in this catalog may not reflect the newest frames and designs that are currently available. Design changes and improvements may be made without prior notification.

Note 2: Data tolerance is +/-10%.

Note 3: ORION FANS meet UL/cUL, TUV, VDE and CE Standards. All ORION FANS are UL/cUL approved and most carry European approvals as well. Models not currently registered with European approval agencies will be submitted (at our discretion) upon customer request.

Note 4: Additional AC and DC voltages not covered in this catalog are available by special order. Ultra High and Ultra Low speeds are also available by special order. (Minimums may apply.)

Note 5: We make additions to our product line frequently. If you cannot find what you are looking for please give us a call at 800-323-2439 or 214-340-0265 or visit our website at www.orionfans.com.

Note 6: Product is warranted against defects in workmanship and materials for 1 year from date of purchase.

Fan Facts...

Life Expectancy

Dual Ball bearing fans will run continuously and reliably for up to 60,000+ hours based on L10 calculations. L10 life for sleeve bearing fans is up to 30,000 hours and sealed sleeve over 50,000 hours. Life will vary depending on the fan size and operating conditions and temperature.

Frames

AC Fans - Diecast aluminum
DC Fans - UL94V-0 glass fiber reinforced plastic is standard for frame sizes 120mm and smaller. Aluminum frames are standard for 127mm and larger. 120mm frames are available in both plastic and aluminum.

Impellers

Glass reinforced thermoplastic - UL94V-0. Optional metal impellers are available for a number of models.

ISO 9001:2008 Certified 951001232-A

ORION FANS is a registered trademark of Knight Electronics

Building an AC Part Number: OA109AP-22-1TB-18. (Note: Many AC fans are available with sensor functions by special order.)							
OA	109	AP	22	1	T	B	18
OA = Orion AC ... Orion AC fan part numbers will generally begin with "OA" (Orion AC) or "OAB" (Orion AC Blower)	*"109" = Model Number ... Model numbers designate frame sizes. In this case "109" will always refer to a 120X38mm fan.*	*AP = Frame Construction ... Frames are available as "AP" (Aluminum Painted), "AN" (Aluminum Natural Sanded), SAP - Stackable aluminum painted SAPL - stackable aluminum painted, low profile*	*"22" = Voltage ... Standard AC voltages are "11" (115VAC), "22" (230VAC), "11/22" or "1/2" (115/230 dual VAC)*	*"1" = Speed ... AC Fans are generally available as "1" (high speed), "2" (medium speed), "3" (low speed)*	*"T" = Termination ... AC Fans are available (except as noted) with power connection terminals (T) or with 12" Lead wires (W)*	*B = Bearing Type ... Standard bearing types are "B" (ball bearing) and "S" (sleeve bearing)* *Sometimes followed by XC indicating high performance*	*18 = Special Function Code ... A suffix after the bearing designator usually indicates a specific modification to the fan. In this case "18" indicates a metal impeller which is different from the Thermoplastic impeller which comes standard on this model*

Building a DC Part Number: OD1238-12HTB01 (Note: some models will include a "C" or an "XC" in the part number)							
OD	1238	-	12	H	T	B	01
OD = Orion DC ... Orion DC fan part numbers will generally begin with "OD" (Orion DC) or "ODB" (Orion DC Blower)	*"1238" = Model Number ... Model numbers designate frame sizes. In this case "1238" will always refer to a 120X38mm fan.*	*[blank] = Frame Construction ... PT or blank - Thermoplastic construction. AP - diecast aluminum black SAP - stackable diecast aluminum black*	*"12" = Voltage ... Standard DC voltages are "05" (5VDC), "12" (12VDC), "24" (24VDC), "48" (48VDC)*	*"H" = Speed ... DC Fans are generally available as "H" (high speed), "M" (medium speed), "L" (low speed) "HH" (extra high speed) and "LL" (extra low speed) "V" (vaneaxial) "XC" high performance*	*"T" = Termination ... DC Fans are available (except as noted) with power connection terminals (T) or with 12" Lead wires [blank]*	*B = Bearing Type ... Standard bearing types are "B" (ball bearing) and "S" (sleeve) and "SS" (sealed sleeve)*	*01 = Special Function Code ... A suffix after the bearing designator usually indicates a specific modification to the fan. In this case "01" indicates a 5VTTL tach o/p **

[none]	Standard
01	Tachometer Output 5VTTL*
02	Alarm Output 5VTTL *
03	Thermistor Speed Control (hub)
04	Thermistor Speed Control (wire)
05	PWM Input
06	Dual Speed
07	Temperature Sensor
08	Tachometer* + Alarm*
09	Tachometer* + Thermistor
10	Tachometer* + PWM
11	Tachometer* + Temperature Sensor
12	Alarm* + Thermistor
13	Alarm* + PWM
14	Alarm* + Termperature Sensor
15	Tachometer* + Alarm* + PWM
16	Tachometer* + Alarm* + Thermistor
17	Extra Long Lead Wires
18	Metal Impeller
19	High Temperature
20	Conformal Coating
21	Customized
55	IP-55

* To specify "open collector" instead of 5VTTL please add the letter "a" after the "Special Function Code".

Additional suffixes consisting of both numbers and letters may be applied for multiple fan modifications .

Special function codes will not appear on the fan label unless specified by the customer.

ORION AC & DC FANS

Fan Selection Guide
[Size, Voltage, Air Flow]

Series	Dimensions (mm)	Dimensions (inches)	Voltages (AC)	Air flow (CFM)	Input Power (Watts)	Page Number
OA60	60X60X30	*2.36”x1.20”*	115-230,DV	11	4	4
OA825	80X80X25	*3.15”x1.00”*	115-230,DV	13-25	4-9	5
OA80	80X80X38	*3.15”x1.50”*	115-230,DV	17-31	5-12	6
OA92	92X92X25	*3.62”x1.00”*	115-230,DV	19-30	6-13	7
OA938	92X92X38	*3.62”x1.50”*	115-230,DV	19-32	19-32	8
OA125	120X120X25	*4.7”x1.0”*	115-230,DV	42-81	6-13	9
OA109	120X120X38	*4.7”x1.5”*	115-230,DV	62-110	8-15	10
OA109 AIOS	120X120X38	*4.7”x1.5”*	115-230	75-99	12-15	13
OA4715	120X120X38	*4.7”x1.5”*	115-230	110	24	12
OA109(XC)	120X120X38	*4.7”x1.5”*	115-230	131	22	11
OA119	127X127X38	*5.0”x1.5”*	115-230	66-125	5-12	14
OA172SAPL	172X150X38	*6.7”x5.9”x1.5”*	115-230	103-212	26-28	15
OA172SAP	172X150X51	*6.7”x5.9”x2.0”*	115-230	110-235	16-35	16
OA5920	172X150X51	*6.7”x5.9”x2.0”*	115-230	180	41	18
OA172SAP(XC)	172X150X51	*6.7”x5.9”x2.0”*	115-230	300	50	17
OA172	172X51	*6.7”x2.0” -*	115-230	135-235	16-35	16
OA162	172X55	*6.7”x2.16” -*	115-230	241	31	19
OA180	176X176X89	*6.9”x3.5”*	115-230	420	70	21
OA180APL	180X180X65	*7.0”x2.6”*	115-230	430	70	20
OA254	254X89	*10”x3.5” -*	115-230	547	35	22
OA254(XC)	254X89	*10”x3.5” -*	115-230	320-850	35-75	23
OA225	225X225X80	*8.85”x3.15”*	115-230	600	72	24
OA280	280X280X80	*11”x3.15”*	115-230	1130	148	25
Series	Dimensions (mm)	Dimensions (inches)	Voltages (DC)	Air flow (CFM)	Options Available	
OD2510	25X25X10	*1.0”x0.39”*	5,12	1.8-3.2	1,2	28
OD3010	30X30X10	*1.18”x0.39”*	5,12	3.2-5.2	1,2	29
OD4010	40X40X10	*1.57”x0.39”*	5,12,24	5.2-7.6	1,2	30
OD4010-SS	40X40X10	*1.57”x0.39”*	12,24	7		61
OD4020	40X40X20	*1.57”x0.79”*	5,12,24	5-7.6	1,2	31
OD4020-SS	40X40X20	*1.57”x0.79”*	12,24	9		61
OD4028	40X40X28	*1.57”x1.1”*	5,12,24	7.0-11	1,2	32
OD4028(XC)	40X40X28	*1.57”x1.1”*	12	26.5	1,2,3,5	33
OD5210	52X52X10	*2.04”x0.39”*	5,12	10-12	1,2	34
OD6010	60X60X10	*2.36”x0.39”*	12	14-21	1,2	35
OD6015	60X60X15	*2.36”x0.59”*	5,12,24	14-19	1,2	36
OD6020	60X60X20	*2.36”x0.79”*	5,12,24	10-18	1,2	37
OD6025	60X60X25	*2.36”x1.0”*	5,12,24,48	12-37	1,2,55	38
OD6025-SS	60X60X25	*2.36”x1.0”*	12,24	25		61
OD6038V	60X60X38	*2.36”x1.5”*	12,24	36-61	1,2	39
OD8015	80X80X15	*3.15”x0.59”*	5,12,24	21-30	1,2	40
OD8025	80X80X25	*3.15”x1.0”*	5,12,24,48	22-40	1,2	41
OD8025-SS	80X80X25	*3.15”x1.0”*	12,24	40		61
OD8032	80X80X32	*3.15”x1.25”*	12,24,48	39-50	1,2,3,5	42
OD8038 and OD8038V	80X80X38	*3.15”x1.5”*	12,24,48	38-112	1,2,3	43,44
OD9220	92X92X20	*3.62”x0.79”*	12,24	21-33	1,2	45
OD9225	92X92X25	*3.62”x1.0”*	5,12,24,48	29-60	1,2	46
OD9225-SS	92X92X25	*3.62”x1.0”*	12,24	52		61
OD9238V	92X92X38	*3.62”x1.5”*	12,24,48	108-135	1,2	47
OD1225	120X120X25	*4.7”x1.0”*	12,24,48	45-86	1,2	48
OD1232	120X120X32	*4.7”x1.25”*	12,24,48	93-120	1,2,3,5	49
OD1238	120X120X38	*4.7”x1.5”*	12,24,48	45-154	1,2,3,5,55	50,51
OD1238(XC) and OD1238V	120X120X38	*4.7”x1.5”*	12,24,48	130-283	1,2,3,55	52,53
OD1238-SS	120X120X38	*4.7”x1.5”*	12,24	91-105		61
OD127AP	127X127X38	*5.0”x1.5”*	12,24,48	86-140	1,2,3,5	54
OD127(XC)	127X127X38	*5.0”x1.5”*	12,24,48	133-242	1,2,3,5	55
OD172SAPL	172X150X38	*6.7”x5.9”x1.5”*	12,24,48	120-225	1,2,3,5	56
OD172AP	172X150X51	*6.7”x5.9”x2.0”*	12,24,48	125-230	1,2,3,5,55	57
OD172SAP(XC)	172X150X51	*6.7”x5.9”x2.0”*	12,24,48	230-307	1,2,3,5,55	58
OD180	180X180X65	*7.1”x2.6”*	12,24,48	250-430	1,2,3,5	59
OD254	254X89	*10”x3.5”*	12,24,48	500-850	1,2,3,5,55	60

Knight Electronics, Inc.
10557 Metric Drive
Dallas, Texas 75243
214-340-0265

Information and data is subject to change without prior notification.

OA60 Series

60 x 30mm
(2.36" x 1.18")

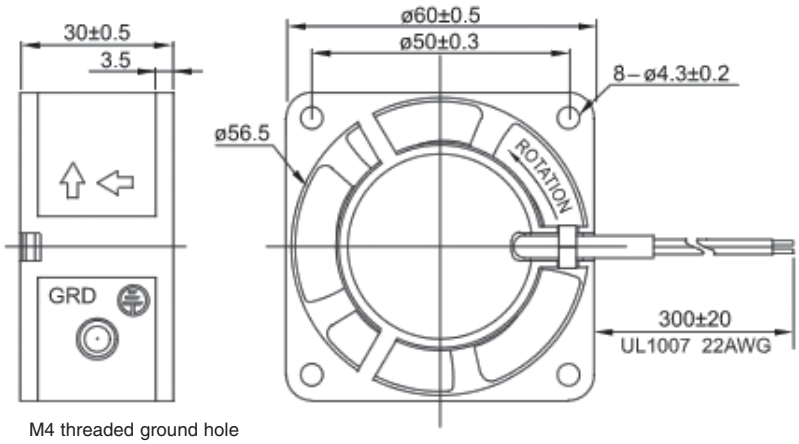

Frame	Diecast Aluminum
Impeller	PBT, UL94V-O plastic
Connection	2x Lead Wires 22 AWG
Motor	Shaded pole, impedance protected
Bearing System	Dual ball
Insulation Resistance	>100M ohm between lead-wire and frame (500VDC)
Dielectric Strength	1 min at 1500 VAC, 50/60Hz

Operating Temperature
Ball Bearing
-20C ~ +80C

Life Expectancy
Ball Bearing
60,000 hours (L10 at 40C)

m2

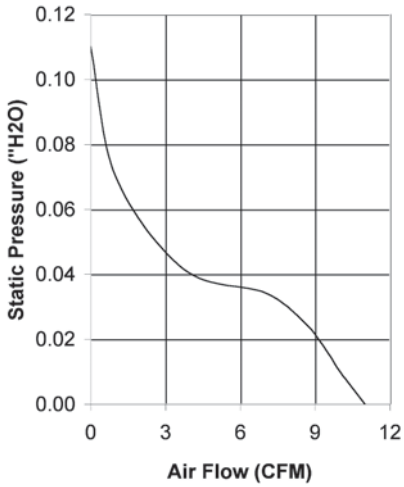

Part Number	OA60AP-11-1WB	OA60AP-22-1WB
Nominal Voltage	115VAC	230VAC
Voltage Range	80 ~ 130VAC	160 ~ 260VAC
Rated Power	4 W	4 W
Rated Speed (RPM)	3100	3100
Airflow (CFM)	11	11
Noise Level (dB)	28	28
Max. Static Pressure	0.11" H_2O	0.11" H_2O

OA825 Series

80 x 25mm
(3.15" x 1.0")

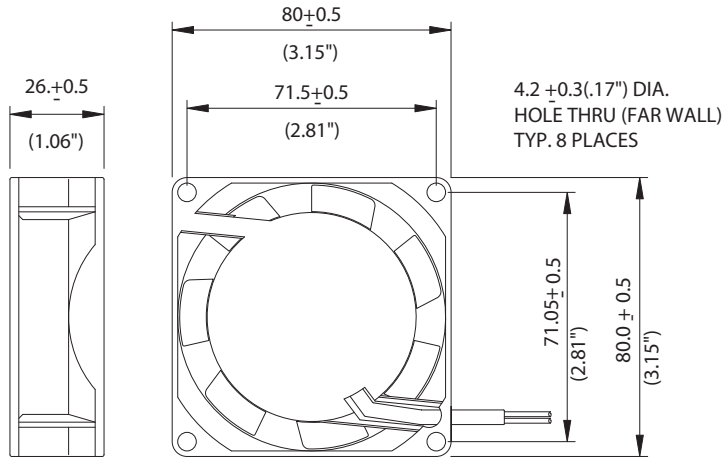

Frame	Diecast Aluminum
Impeller	PBT, UL94V-O plastic
Connection	2x Lead Wires 22 AWG or terminals
Motor	Shaded pole, impedance protected
Bearing System	Dual ball or Sleeve
Insulation Resistance	>100M ohm between lead-wire and frame (500VDC)
Dielectric Strength	1 min at 1500 VAC, 50/60Hz

Operating Temperature
Ball Bearing
-20C ~ +80C
Sleeve Bearing
-10C ~ +50C

Life Expectancy
Ball Bearing
60,000 hours (L10 at 40C)
Sleeve Bearing
30,000 hours (L10 at 40C)

Dual Voltage
Connection via 4x leads.
Fans can be configured for 115V or 230V operation.

m0

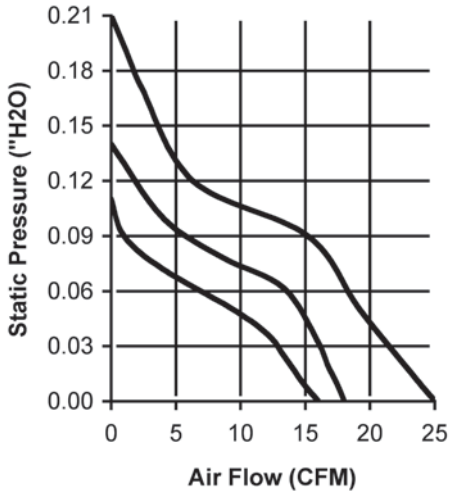

Model Number	Speed (RPM)	Airflow (CFM)	Noise (dB)	Volts AC	Voltage Range	Watts	Max. Static Pressure ("H2O)
OA825AP-11-1*	3000	25	28	115	80~130	9	.21
OA825AP-11-2*	2300	18	24	115	80~130	6	.14
OA825AP-11-3*	1900	16	19	115	80~130	4	.11
OA825AP-22-1*	3000	25	28	230	160~260	9	.21
OA825AP-22-2*	2300	18	24	230	160~260	6	.14
OA825AP-22-3*	1900	16	19	230	160~260	4	.11
OA825AP-11/22-1W**	3000	25	28	115/230	80~260	9	.21
OA825AP-11/22-2W**	2300	18	24	115/230	80~260	6	.14
OA825AP-11/22-3W**	1900	16	19	115/230	80~260	4	.11

** Indicate "TB" (Terminal Ball Bearing), "WB" (12" Wire Leads, Ball Bearing), "TS" (Terminal, Sleeve Bearing), "WS" (12" Wire Leads, Sleeve Bearing)*
*** Indicate "B" (Ball Bearing) or "S" (Sleeve Bearing)*

OA80 Series

AC Fan - 115V, 230V, Dual Voltage
80 x 38mm(3.15" x 1.5")

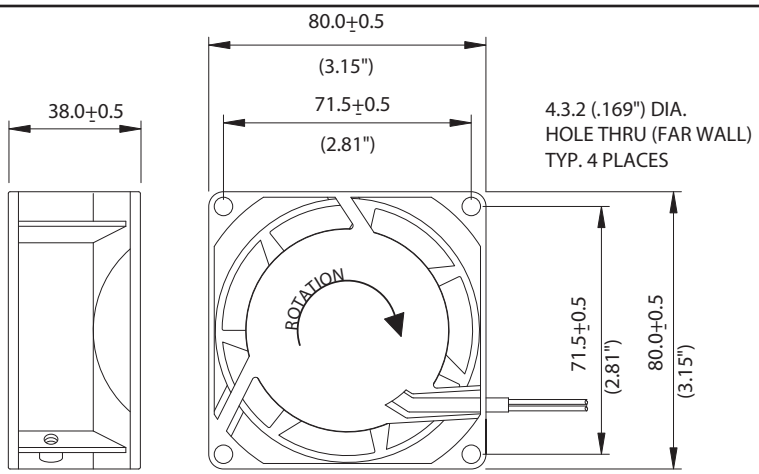

Frame	Diecast Aluminum
Impeller	PBT, UL94V-O plastic
Connection	2x Lead Wires 22 AWG or terminals
Motor	Shaded pole, impedance protected
Bearing System	Dual ball or Sleeve
Insulation Resistance	>100M ohm between lead-wire and frame (500VDC)
Dielectric Strength	1 min at 1500 VAC, 50/60Hz

Operating Temperature
Ball Bearing
-20C ~ +80C
Sleeve Bearing
-10C ~ +50C

Life Expectancy
Ball Bearing
60,000 hours (L10 at 40C)
Sleeve Bearing
30,000 hours (L10 at 40C)

Dual Voltage
Connection via 4x leads.
Fans can be configured for 115V or 230V operation.

m0

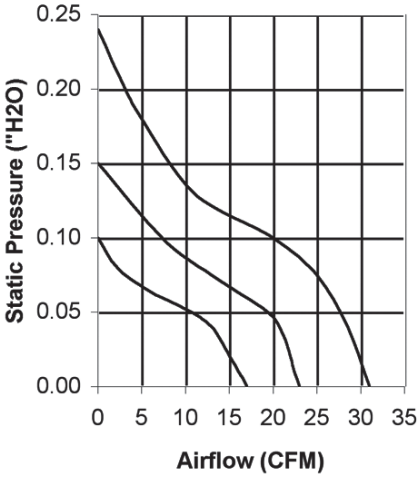

Model Number	Speed (RPM)	Airflow (CFM)	Noise (dB)	Volts AC	Voltage Range	Watts	Max. Static Pressure ("H2O)
OA80AP-11-1*	3000	31	29	115	80~130	12	0.24
OA80AP-11-2*	2300	23	22	115	80~130	9	0.15
OA80AP-11-3*	1600	17	18	115	80~130	5	0.10
OA80AP-22-1*	3000	31	29	230	160~260	12	0.24
OA80AP-22-2*	2300	23	22	230	160~260	9	0.15
OA80AP-22-3*	1600	17	18	230	160~260	5	0.10
OA80AP-11/22-1W**	3000	31	29	115/230	80~260	12	0.24
OA80AP-11/22-2W**	2300	23	22	115/230	80~260	9	0.15
OA80AP-11/22-3W**	1600	17	18	115/230	80~260	5	0.10

** Indicate "TB" (Terminal Ball Bearing), "WB" (12" Wire Leads, Ball Bearing), "TS" (Terminal, Sleeve Bearing), "WS" (12" Wire Leads, Sleeve Bearing)*
*** Indicate "B" (Ball Bearing) or "S" (Sleeve Bearing)*

Alternate 5 blade frame style available (m2)

Knight Electronics, Inc.
10557 Metric Drive
Dallas, Texas 75243
214-340-0265

RoHS Compliant

Orion Fans
Information and data is subject to change without prior notification.

OA92 Series

AC Fan - 115V, 230V, Dual Voltage
92 x 25mm(3.62" x 1.0")

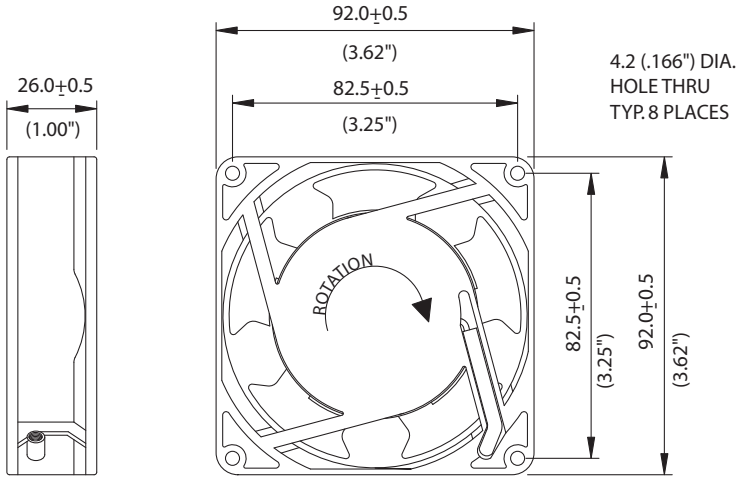

Frame	Diecast Aluminum
Impeller	PBT, UL94V-O plastic
Connection	2x Lead Wires 22 AWG (~300mm) or terminals
Motor	Shaded pole, impedance protected
Bearing System	Dual ball or Sleeve
Insulation Resistance	>100M ohm between lead-wire and frame (500VDC)
Dielectric Strength	1 min at 1500 VAC, 50/60Hz

Operating Temperature
Ball Bearing
-20C ~ +80C
Sleeve Bearing
-10C ~ +50C

Life Expectancy
Ball Bearing
60,000 hours (L10 at 40C)
Sleeve Bearing
30,000 hours (L10 at 40C)

Dual Voltage
Connection via 4x leads.
Fans can be configured for 115V or 230V operation.

m0

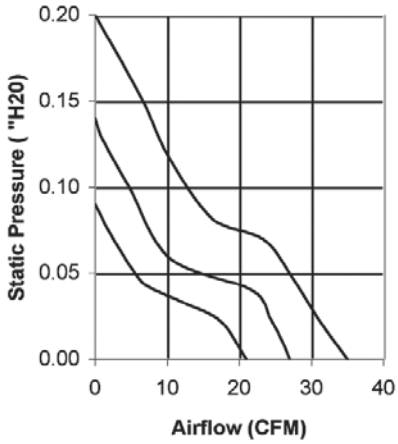

Model Number	Speed (RPM)	Airflow (CFM)	Noise (dB)	Volts AC	Voltage Range	Watts	Max. Static Pressure ("H2O)
OA92AP-11-1*	3000	35	30	115	80~130	13	.20
OA92AP-11-2*	2300	27	22	115	80~130	10	.14
OA92AP-11-3*	1900	22	19	115	80~130	6	.09
OA92AP-22-1*	3000	35	30	230	160~260	13	.20
OA92AP-22-2*	2300	27	22	230	160~260	10	.14
OA92AP-22-3*	1900	22	19	230	160~260	6	.09
OA92AP-11/22-1W**	3000	35	30	115/230	80~260	13	.20
OA92AP-11/22-2W**	2300	27	22	115/230	80~260	10	.14
OA92AP-11/22-3W**	1900	22	19	115/230	80~260	6	.09

** Indicate "TB" (Terminal Ball Bearing), "WB" (12" Wire Leads, Ball Bearing), "TS" (Terminal, Sleeve Bearing), "WS" (12" Wire Leads, Sleeve Bearing)*
*** Indicate "B" (Ball Bearing) or "S" (Sleeve Bearing)*

Knight Electronics, Inc.
10557 Metric Drive
Dallas, Texas 75243
214-340-0265

RoHS Compliant

Orion Fans
Information and data is subject to change without prior notification.

OA938 Series

AC Fan - 115V, 230V, Dual Voltage
92 x 38mm(3.62" x 1.5")

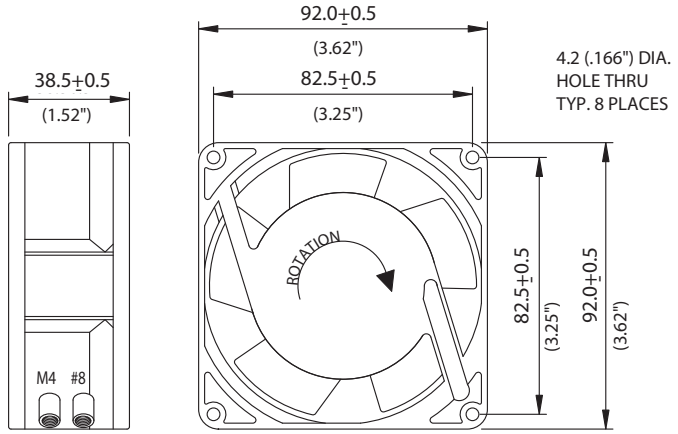

Frame	Diecast Aluminum
Impeller	PBT, UL94V-O plastic
Connection	2x Lead Wires 22 AWG or terminals
Motor	Shaded pole, impedance protected
Bearing System	Dual ball or Sleeve
Insulation Resistance	>100M ohm between lead-wire and frame (500VDC)
Dielectric Strength	1 min at 1500 VAC, 50/60Hz

Operating Temperature
Ball Bearing
-20C ~ +80C
Sleeve Bearing
-10C ~ +50C

Life Expectancy
Ball Bearing
60,000 hours (L10 at 40C)
Sleeve Bearing
30,000 hours (L10 at 40C)

Dual Voltage
Connection via 4x leads.
Fans can be configured for 115V or 230V operation.

m0

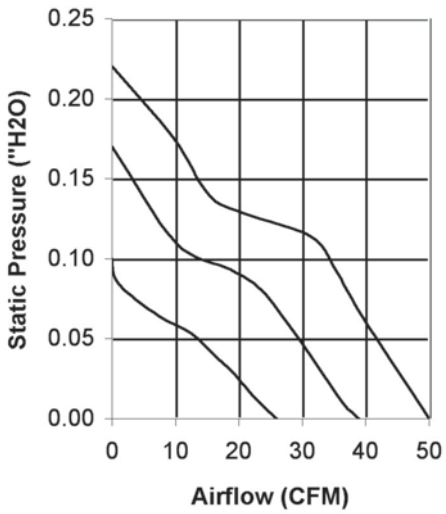

Model Number	Speed (RPM)	Airflow (CFM)	Noise (dB)	Volts AC	Voltage Range	Watts	Max. Static Pressure ("H2O)
OA938AP-11-1*	3100	50	32	115	80~130	9	.22
OA938AP-11-2*	2400	39	23	115	80~130	5	.17
OA938AP-11-3*	1800	26	19	115	80~130	3	.10
OA938AP-22-1*	3100	50	32	230	160~260	9	.22
OA938AP-22-2*	2400	39	23	230	160~260	5	.17
OA938AP-22-3*	1800	26	19	230	160~260	3	.10
OA938AP-11/22-1W**	3100	50	32	115/230	80~260	9	.22
OA938AP-11/22-2W**	2400	39	23	115/230	80~260	5	.17
OA938AP-11/22-3W**	1800	26	19	115/230	80~260	3	.10

** Indicate "TB" (Terminal Ball Bearing), "WB" (12" Wire Leads, Ball Bearing), "TS" (Terminal, Sleeve Bearing), "WS" (12" Wire Leads, Sleeve Bearing)*
*** Indicate "B" (Ball Bearing) or "S" (Sleeve Bearing)*

Knight Electronics, Inc.
10557 Metric Drive
Dallas, Texas 75243
214-340-0265

RoHS Compliant

Orion Fans
Information and data is subject to change without prior notification.

OA125 Series

AC Fan - 115V, 230V, Dual Voltage
120 x 25mm (4.7” x 1.0”)

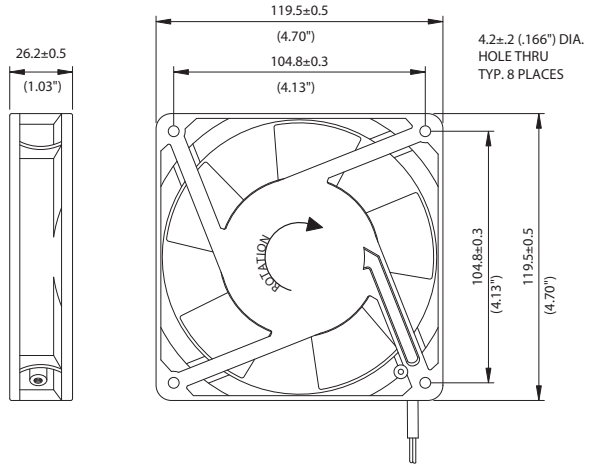

Frame	Diecast Aluminum
Impeller	PBT, UL94V-O plastic
Connection	2x Lead Wires 22 AWG or terminals
Motor	Shaded pole, impedance protected Tachometer available (5VTTL), input 5 ~24V
Bearing System	Dual ball or Sleeve
Insulation Resistance	>100M ohm between lead-wire and frame (500VDC)
Dielectric Strength	1 min at 1500 VAC, 50/60Hz

Operating Temperature
Ball Bearing
-20C ~ +80C
Sleeve Bearing
-10C ~ +50C

Life Expectancy
Ball Bearing
60,000 hours (L10 at 40C)
Sleeve Bearing
30,000 hours (L10 at 40C)

Dual Voltage
Connection via 4x leads.
Fans can be configured for 115V or 230V operation.

m0

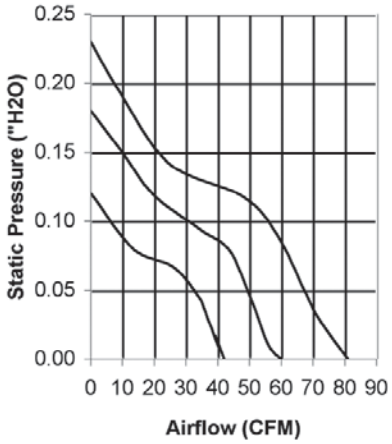

Model Number	Speed (RPM)	Airflow (CFM)	Noise (dB)	Volts AC	Voltage Range	Watts	Max. Static Pressure (“H2O)
OA125AP-11-1*	2900	81	33	115	80~130	13	.23
OA125AP-11-2*	2300	60	27	115	80~130	10	.18
OA125AP-11-3*	1600	42	22	115	80~130	6	.12
OA125AP-22-1*	2900	81	32	230	160~260	13	.23
OA125AP-22-2*	2300	60	27	230	160~260	10	.18
OA125AP-22-3*	1600	42	22	230	160~260	6	.12
OA125AP-11/22-1W**	2900	81	32	115/230	80~260	13	.23
OA125AP-11/22-2W**	2300	60	27	115/230	80~260	10	.18
OA125AP-11/22-3W**	1600	42	22	115/230	80~260	6	.12

** Indicate “TB” (Terminal Ball Bearing), “WB” (12” Wire Leads, Ball Bearing), “TS” (Terminal, Sleeve Bearing), “WS” (12” Wire Leads, Sleeve Bearing)*
*** Indicate “B” (Ball Bearing) or “S” (Sleeve Bearing)*
Frame Style - m0

Knight Electronics, Inc.
10557 Metric Drive
Dallas, Texas 75243
214-340-0265

RoHS Compliant

Orion Fans
Information and data is subject to change without prior notification.

OA109 Series

AC Fan - 115V, 230V, Dual Voltage
120x38mm (4.7"x 1.5")

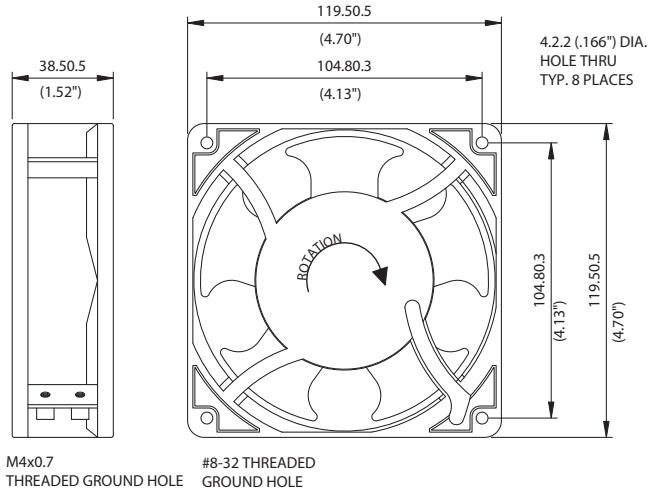

Frame	Diecast Aluminum
Impeller	PBT, UL94V-O plastic
Connection	2x 300mm Lead wires (22AWG) or terminals
Motor	AC shaded pole, impedance and thermally protected
Bearing System	Dual ball or Sleeve
Insulation Resistance	10M ohm between leadwire and frame (500VDC)
Dielectric Strength	1 min at 1500 VAC, 50/60Hz

Operating Temperature
Ball Bearing
-20C ~ +80C
Sleeve Bearing
-10C ~ +50C

Life Expectancy
Ball Bearing
60,000 hours (L10 at 40C)
Sleeve Bearing
30,000 hours (L10 at 40C)

Dual Voltage
Fans can be configured to run on 115V or 230V. Connection via 4x leads

m0

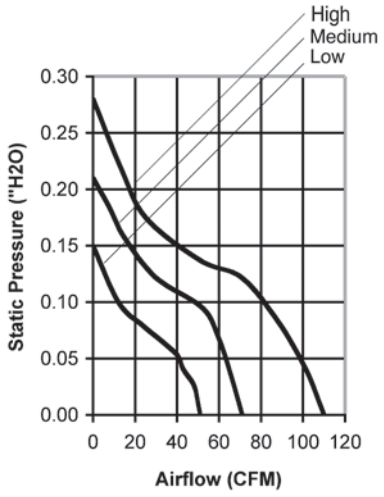

Model Number	Speed (RPM)	Airflow (CFM)	Noise (dB)	Volts AC	Voltage Range	Watts	Max. Static Pressure ("H2O)
OA109AP-11-1*	3000	110	42	115	80~130	15	.28
OA109AP-11-2*	2300	71	35	115	80~130	11	.24
OA109AP-11-3*	1600	51	25	115	80~130	8	.15
OA109AP-22-1*	3000	110	42	230	160~260	15	.28
OA109AP-22-2*	2300	71	35	230	160~260	11	.24
OA109AP-22-3*	1600	51	25	230	160~260	8	.15
OA109AP-11/22-1W**	3000	110	42	115/230	80~260	15	.28
OA109AP-11/22-2W**	2300	71	35	115/230	80~260	11	.24
OA109AP-11/22-3W**	1600	51	25	115/230	80~260	8	.15

** Indicate "TB" (Terminal Ball Bearing), "WB" (12" Wire Leads, Ball Bearing), "TS" (Terminal, Sleeve Bearing), "WS" (12" Wire Leads, Sleeve Bearing)*
*** Indicate "B" (Ball Bearing) or "S" (Sleeve Bearing)*

Knight Electronics, Inc.
10557 Metric Drive
Dallas, Texas 75243
214-340-0265

RoHS Compliant

Orion Fans
Information and data is subject to change without prior notification.

OA109 'XC Series'

AC Fan - 115V, 230V
120x38mm (4.7"x 1.5")

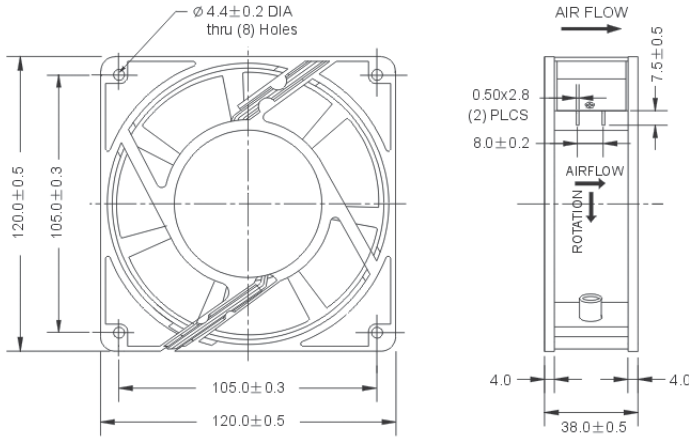

Frame	Diecast Aluminum
Impeller	PBT, UL94V-O plastic
Connection	2x Lead wires (24AWG*) or Terminals
Motor	AC capacitor drive, thermally protected
Bearing System	Dual ball
Insulation Resistance	>100M ohm between lead-wire and frame (500VDC)
Dielectric Strength	1 min at 1500 VAC, 50/60Hz

Operating Temperature
Ball Bearing
-10C ~ +65C

Life Expectancy
Ball Bearing
60,000 hours (L10 at 40C)

(* Wires ~300mm)

m4

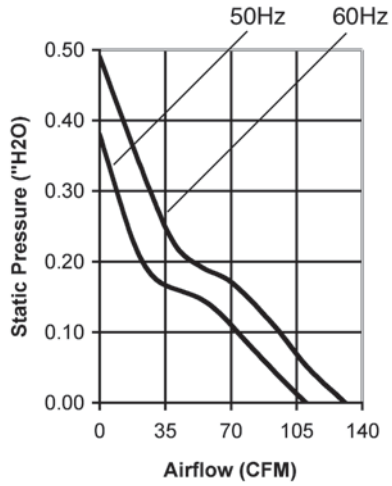

Part Number	OA109AP-11-1 * B XC	OA109AP-22-1 * B XC
Nominal Voltage	120 VAC	230 VAC
Rated Power (50/60 Hz)	20 / 21 W	21 / 22 W
Nominal Current	0.17 / 0.18 A	0.10 / 0.11 A
Frequency (Hz)	50 / 60	50 / 60
Rated Speed (RPM)	2800 / 3300	2800 / 3300
Airflow (CFM)	110 / 131	110 / 131
Noise Level (dB)	43 / 47	43 / 47
Max. Static Pressure	0.38" / 0.49" H_2O	0.38" / 0.49" H_2O

* Insert "T" to specify Terminal or "W" to specify Wire leads

Knight Electronics, Inc.
10557 Metric Drive
Dallas, Texas 75243
214-340-0265

RoHS Compliant

Orion Fans
Information and data is subject to change without prior notification.

OA4715 Series

AC Fan - 115V, 230V
120x38mm (4.7"x 1.5")

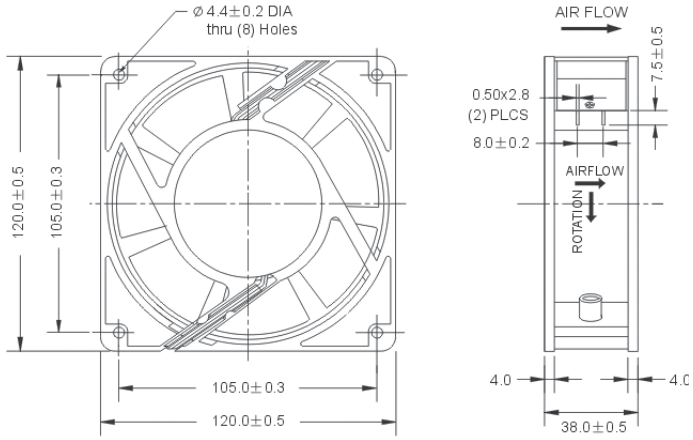

Frame	Diecast Aluminum
Impeller	PBT, UL94V-O plastic
Connection	Terminals
Motor	AC shaded pole, impedance protected
Bearing System	Dual ball
Insulation Resistance	>100M ohm between lead-wire and frame (500VDC)
Dielectric Strength	1 min at 1500 VAC, 50/60Hz

Operating Temperature
Ball Bearing
-10C ~ +70C

Life Expectancy
Ball Bearing
60,000 hours (L10 at 40C)

m4

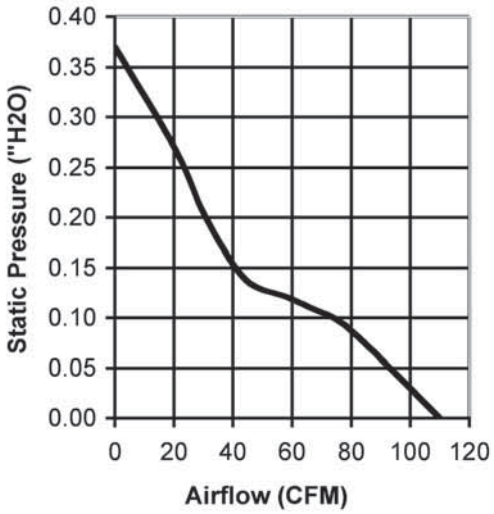

Part Number	OA4715-12TB	OA4715-23TB
Nominal Voltage	120 VAC	230 VAC
Nominal Current	0.30 A	0.23 A
Rated Power	24 W (60Hz)	23 W (60Hz)
Rated Speed (RPM)	3000	3000
Airflow (CFM)	110	110
Noise Level (dB)	44	44
Max. Static Pressure	0.37" H_2O	0.37" H_2O

Knight Electronics, Inc.
10557 Metric Drive
Dallas, Texas 75243
214-340-0265

RoHS Compliant

Orion Fans
Information and data is subject to change without prior notification.

OA109 (AIOS)

AC Fan - 115V, 230V, Reverse Airflow
120x38mm (4.7"x 1.5")

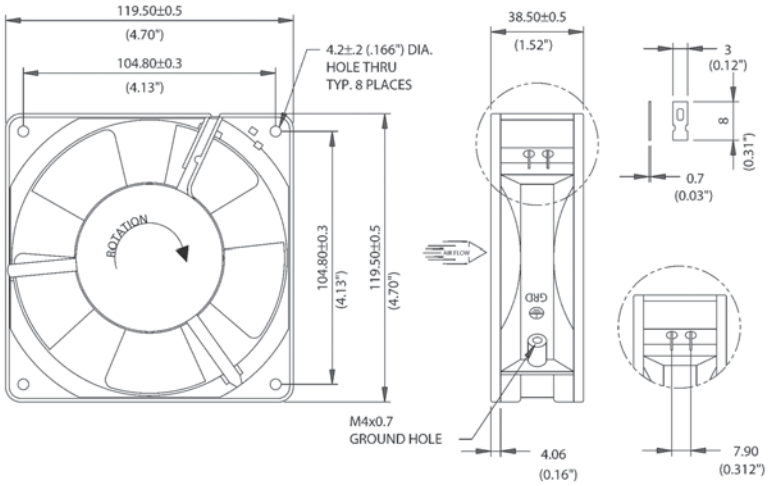

Frame	Diecast Aluminum
Impeller	PBT, UL94V-O plastic
Connection	2x 300mm Lead wires (22AWG) or terminals
Motor	AC shaded pole, impedance protected
Bearing System	Dual ball or Sleeve
Insulation Resistance	10M ohm between leadwire and frame (500VDC)
Dielectric Strength	1 min at 1500 VAC, 50/60Hz

Operating Temperature
Ball Bearing
-20C ~ +80C
Sleeve Bearing
-10C ~ +50C

Life Expectancy
Ball Bearing
60,000 hours (L10 at 40C)
Sleeve Bearing
30,000 hours (L10 at 40C)

AIOS
Air Input Over Struts

m2

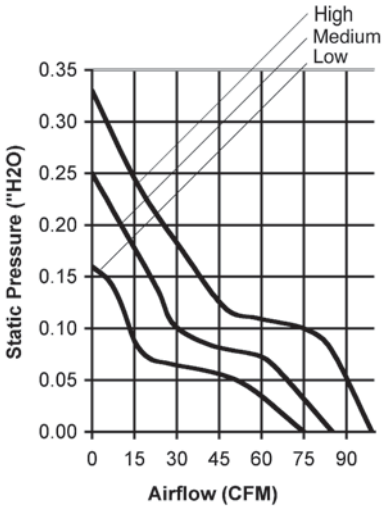

Model Number	Speed (RPM)	Airflow (CFM)	Noise (dB)	Volts AC	Voltage Range	Watts	Max. Static Pressure ("H2O)
OA109AP-11-1 * R	3100	99	47	115	80~130	15	.33
OA109AP-11-2 * R	2750	85	45	115	80~130	13	.25
OA109AP-11-3 * R	2300	75	38	115	80~130	12	.16
OA109AP-22-1 * R	3100	99	47	230	160~260	15	.33
OA109AP-22-2 * R	2750	85	45	230	160~260	13	.25
OA109AP-22-3 * R	2300	75	38	230	160~260	12	.16

** Indicate "TB" (Terminal Ball Bearing), "WB" (12" Wire Leads, Ball Bearing), "TS" (Terminal, Sleeve Bearing), "WS" (12" Wire Leads, Sleeve Bearing)*

Knight Electronics, Inc.
10557 Metric Drive
Dallas, Texas 75243
214-340-0265

RoHS Compliant

Orion Fans
Information and data is subject to change without prior notification.

OA119 Series

AC Fan - 115V, 230V
127 x 38mm (5.0" x 1.5")

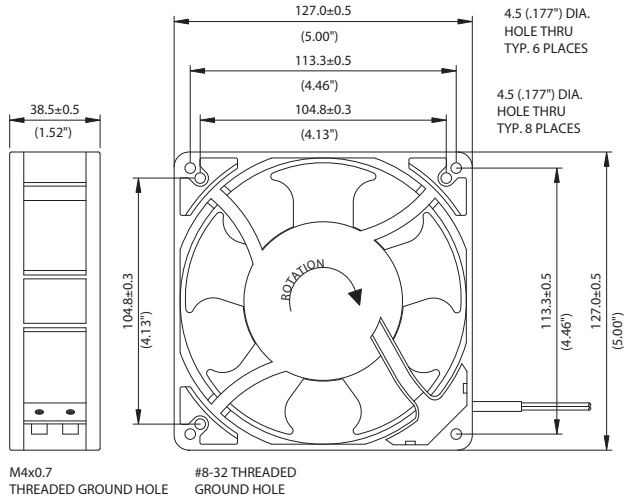

Frame	Diecast Aluminum
Impeller	PBT, UL94V-O plastic
Connection	2x Lead Wires 22 AWG or terminals
Motor	Shaded pole, impedance protected Tachometer available (5VTTL), input 5 ~24V
Bearing System	Dual ball or Sleeve
Insulation Resistance	>100M ohm between lead-wire and frame (500VDC)
Dielectric Strength	1 min at 1500 VAC, 50/60Hz

Operating Temperature
Ball Bearing
-20C ~ +80C
Sleeve Bearing
-10C ~ +50C

Life Expectancy
Ball Bearing
60,000 hours (L10 at 40C)
Sleeve Bearing
30,000 hours (L10 at 40C)

Dual Voltage
Connection via 4x leads. Fans can be configured for 115V or 230V operation.

m0

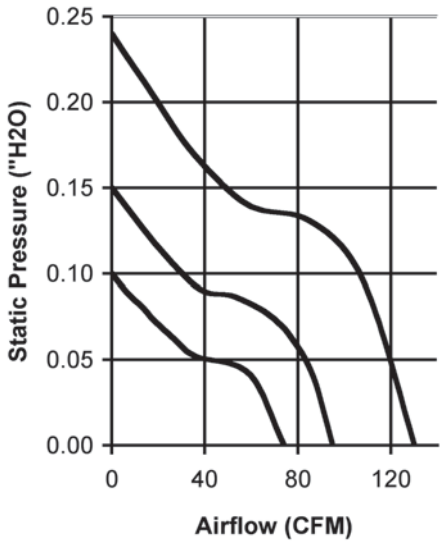

Model Number	Speed (RPM)	Airflow (CFM)	Noise (dB)	Volts AC	Voltage Range	Watts	Max. Static Pressure ("H2O)
OA119AP-11-1*	3000	130	46	115	80~130	14	.24
OA119AP-11-2*	2300	95	37	115	80~130	10	.15
OA119AP-11-3*	1400	74	28	115	80~130	7	.10
OA119AP-22-1*	3000	130	46	230	160~260	14	.24
OA119AP-22-2*	2300	95	37	230	160~260	10	.15
OA119AP-22-3*	1400	74	28	230	160~260	7	.10

** Indicate "TB" (Terminal Ball Bearing), "WB" (12" Wire Leads, Ball Bearing), "TS" (Terminal, Sleeve Bearing), "WS" (12" Wire Leads, Sleeve Bearing)*

Knight Electronics, Inc.
10557 Metric Drive
Dallas, Texas 75243
214-340-0265

RoHS Compliant

Orion Fans
Information and data is subject to change without prior notification.

OA172SAPL Series

172 x 150 x 38mm
(6.7”x 5.9”x 1.5”)

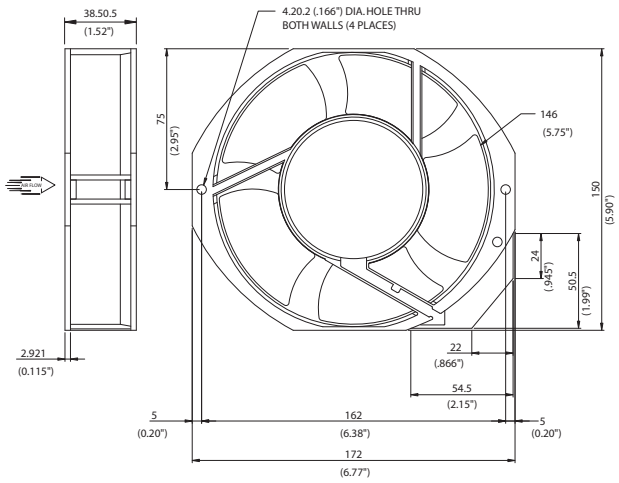

Frame	Diecast Aluminum
Impeller	PBT, UL94V-O plastic
Connection	2x Lead Wires or Terminals
Motor	Capacitor drive, thermally protected
Bearing System	Dual ball
Insulation Resistance	>100M ohm between lead-wire and frame (500VDC)
Dielectric Strength	1 min at 1500 VAC, 50/60Hz

Operating Temperature
Ball Bearing
-20C ~ +80C

Life Expectancy
Ball Bearing
60,000 hours (L10 at 40C)

m2

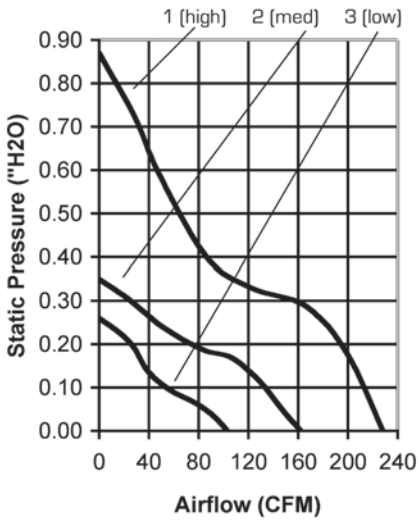

Model Number	Speed (RPM)	Airflow (CFM)	Noise (dB)	Volts AC	Voltage Range	Watts	Max. Static Pressure (“H2O)
OA172SAPL-11-1 *	3400	228	58	115	103~126	28	0.87
OA172SAPL-11-2 *	2750	162	50	115	103~126	27	0.35
OA172SAPL-11-3 *	1700	103	44	115	103~126	26	0.26
OA172SAPL-22-1 *	3400	228	58	230	160~260	28	0.87
OA172SAPL-22-3 *	1700	103	44	230	160~260	26	0.26

** Indicate “TB” (Terminal Ball Bearing), “WB” (12” Wire Leads, Ball Bearing)*

OA172S Series *

172 x 150 x 51mm
(6.7”x 5.9” x 2.0”)

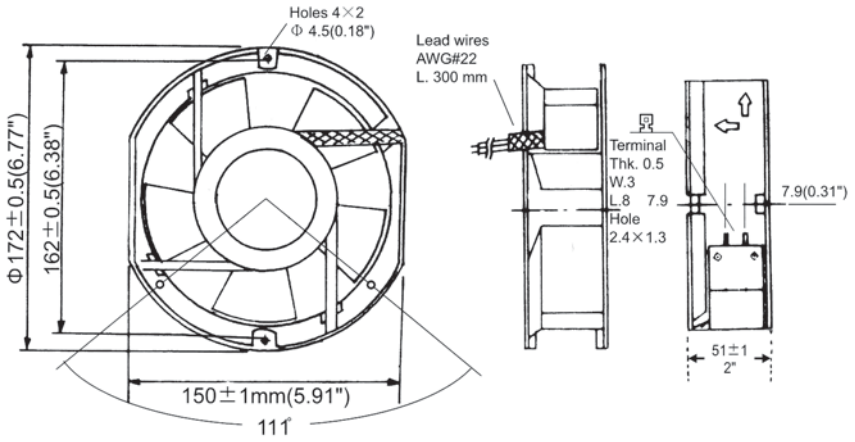

Frame	Diecast Aluminum
Impeller	PBT, UL94V-O plastic
Connection	2x Lead Wires or Terminals
Motor	Capacitor drive, impedance protected
Bearing System	Dual ball
Insulation Resistance	>100M ohm between lead-wire and frame (500VDC)
Dielectric Strength	1 min at 1500 VAC, 50/60Hz

Operating Temperature
Ball Bearing
-40C ~ +70C

Life Expectancy
Ball Bearing
60,000 hours (L10 at 40C)

m0

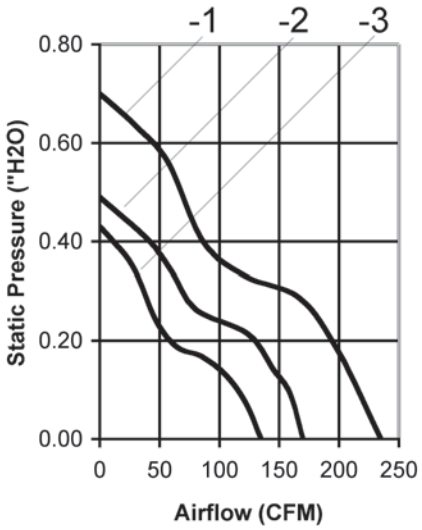

Model Number	Speed (RPM)	Airflow (CFM)	Noise (dB)	Volts AC	Voltage Range	Watts	Max. Static Pressure (“H2O)
OA172SAP-11-1( )B	3200	235	52	115	80~130	35	0.70
OA172SAP-11-2( )B	2400	170	42	115	80~130	20	0.49
OA172SAP-11-3( )B	1800	135	33	115	80~130	16	0.43
OA172SAP-22-1( )B	3200	235	52	230	160~260	35	0.70
OA172SAP-22-2( )B	2400	170	42	230	160~260	20	0.49
OA172SAP-22-3( )B	1800	135	33	230	160~260	16	0.43

( ) Indicate “T” for Terminal or “W” for Wire Leads

* Use prefix OA172AP instead of OA172SAP to specify round frame instead of the flat-sided, “stackable” version.

Knight Electronics, Inc.
10557 Metric Drive
Dallas, Texas 75243
214-340-0265

RoHS Compliant

Orion Fans
Information and data is subject to change without prior notification.

OA172 'XC Series'

172 x 150 x 51mm
(6.7"x 5.9" x 2.0")

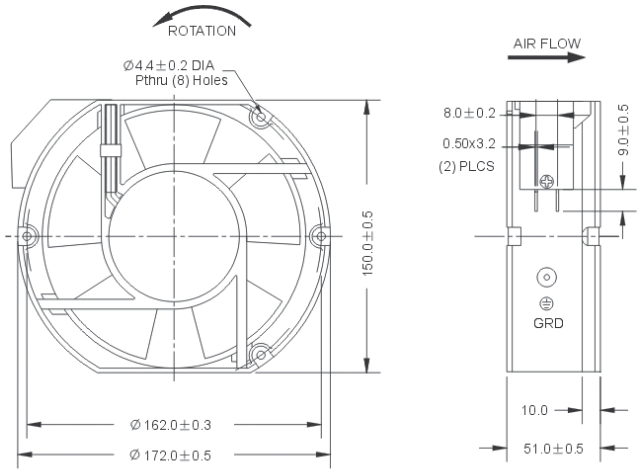

Frame	Diecast Aluminum
Impeller	PBT, UL94V-O plastic
Connection	2x Lead Wires or Terminals
Motor	Capacitor drive, thermally protected
Bearing System	Dual ball (Sleeve available)
Insulation Resistance	>100M ohm between lead-wire and frame (500VDC)
Dielectric Strength	1 min at 1500 VAC, 50/60Hz

Operating Temperature
Ball Bearing
-40C ~ +70C

Life Expectancy
Ball Bearing
60,000 hours (L10 at 40C)

m4

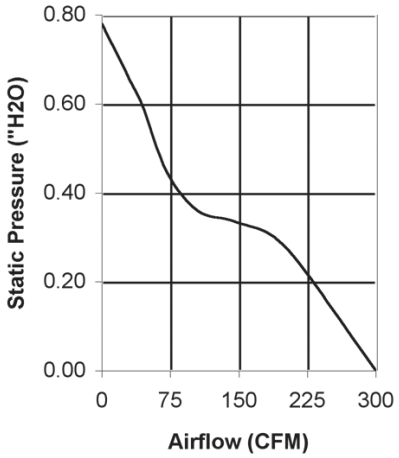

Part Number	OA172SAP-11-1 ( )B XC	OA172SAP-22-1 ( )B XC
Nominal Voltage	120 VAC	230 VAC
Voltage Range	100 ~ 125 VAC	200 ~ 240 VAC
Rated Power	50 W (60Hz)	50 W (60Hz)
Rated Speed (RPM)	3300	3300
Airflow (CFM)	300	300
Noise Level (dB)	61	61
Max. Static Pressure	0.78" H_2O	0.78" H_2O

( ) Indicate "T" for Terminal or "W" for Wire Leads

Knight Electronics, Inc.
10557 Metric Drive
Dallas, Texas 75243
214-340-0265

RoHS Compliant

Orion Fans
Information and data is subject to change without prior notification.

OA5920 'Challenger Series'

172 x 150 x 51mm
(6.7"x 5.9" x 2.0")

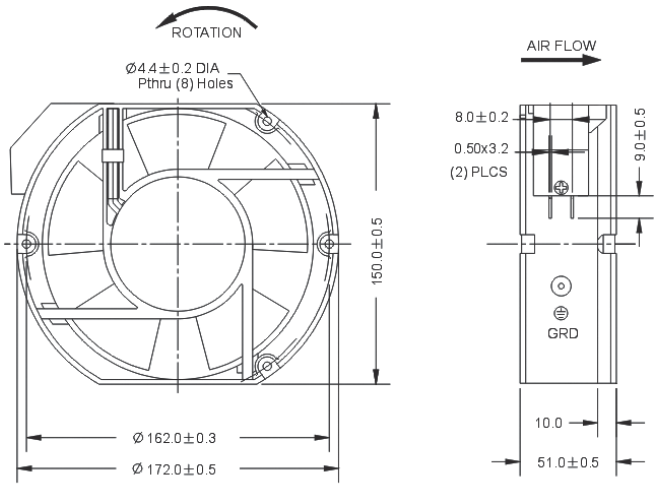

Frame	Diecast Aluminum
Impeller	PBT, UL94V-O plastic
Connection	Terminals
Motor	Shaded pole, thermally protected
Bearing System	Dual ball (Sleeve available)
Insulation Resistance	>100M ohm between lead-wire and frame (500VDC)
Dielectric Strength	1 min at 1500 VAC, 50/60Hz

Operating Temperature
Ball Bearing
-10C ~ +70C

Life Expectancy
Ball Bearing
60,000 hours (L10 at 40C)

m4

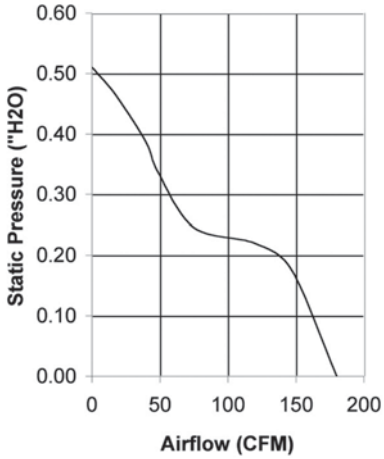

Part Number	OA5920-12TB	OA5920-23TB
Nominal Voltage	120 VAC	230 VAC
Voltage Range	80 ~ 130 VAC	160 ~ 260 VAC
Rated Power	41 W (60Hz)	41 W (60Hz)
Rated Speed (RPM)	3000	3000
Airflow (CFM)	180	180
Noise Level (dB)	55	55
Max. Static Pressure	0.51" H_2O	0.51" H_2O

Knight Electronics, Inc.
10557 Metric Drive
Dallas, Texas 75243
214-340-0265

RoHS Compliant

Orion Fans
Information and data is subject to change without prior notification.

OA162 Series

172 x 55mm
(6.7″ x 2.2″)

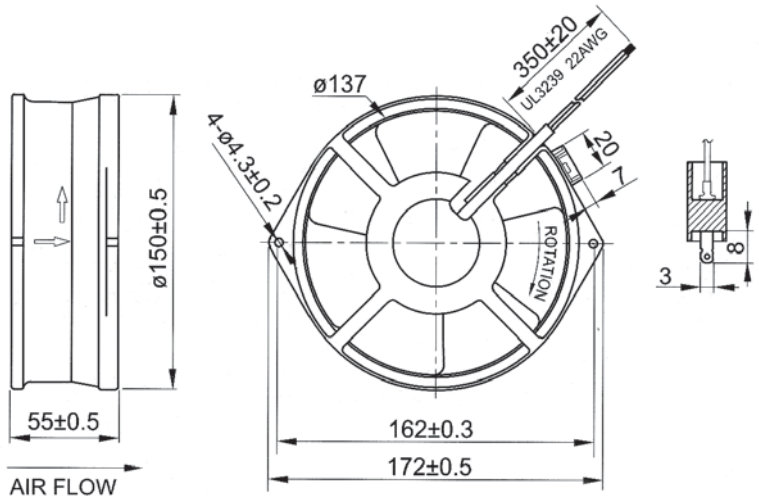

Frame & Impeller	Diecast Aluminum
Connection	Terminals or Lead Wires
Motor	Shaded Pole, thermally protected
Bearing System	Dual ball (Sleeve available)
Insulation Resistance	>100M ohm between lead-wire and frame (500VDC)
Dielectric Strength	1 min at 1500 VAC, 50/60Hz

Operating Temperature
Ball Bearing
-40C ~ +70C

Life Expectancy
Ball Bearing
60,000 hours (L10 at 40C)

m2

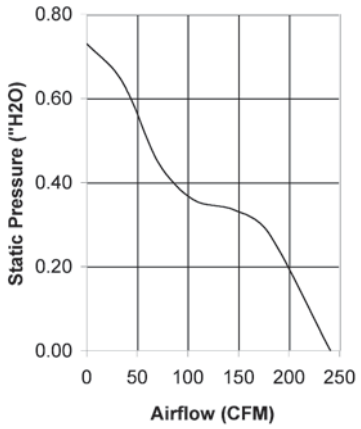

Part Number	OA162-5E-115 * B	OA162-5E-230 * B
Nominal Voltage	120 VAC	230 VAC
Voltage Range	80 ~ 130 VAC	160 ~ 260 VAC
Rated Power	31 W (60Hz)	31 W (60Hz)
Rated Speed (RPM)	3400	3400
Airflow (CFM)	241	241
Noise Level (dB)	66	66
Max. Static Pressure	0.73” H_2O	0.73” H_2O

* Indicate “T” for Terminal or “W” for Wire leads

Knight Electronics, Inc.
10557 Metric Drive
Dallas, Texas 75243
214-340-0265

RoHS Compliant

Orion Fans
Information and data is subject to change without prior notification.

OA180APL Series

AC Fan - 115V, 230V
180 x 65mm (7.1" x 2.6")

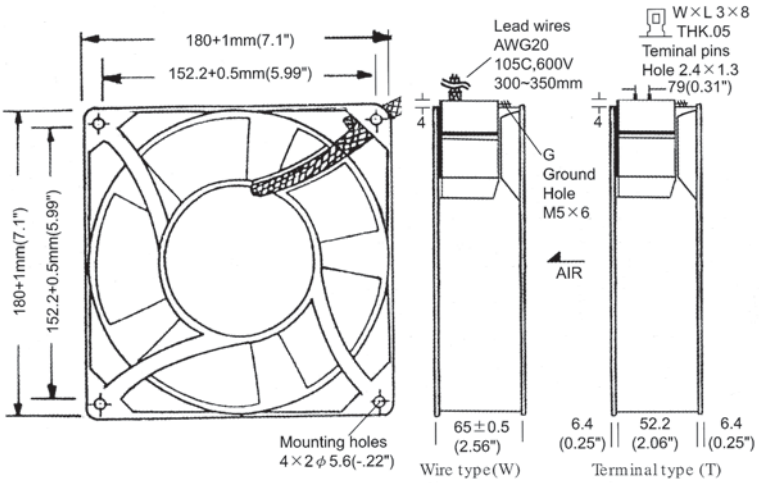

Frame	Diecast Aluminum
Impeller	PBT, UL94V-O plastic
Connection	2x Lead Wires 20 AWG or terminals
Motor	Single phase Capacitor induction, 2/4 pole, inner rotor, thermal protection
Bearing System	Dual ball
Insulation Resistance	>100M ohm between lead-wire and frame (500VDC)
Dielectric Strength	1 min at 1500 VAC, 50/60Hz

Operating Temperature
Ball Bearing
-20C ~ +80C

Life Expectancy
Ball Bearing
60,000 hours (L10 at 40C)

Available as dual speed or dual voltage

m0

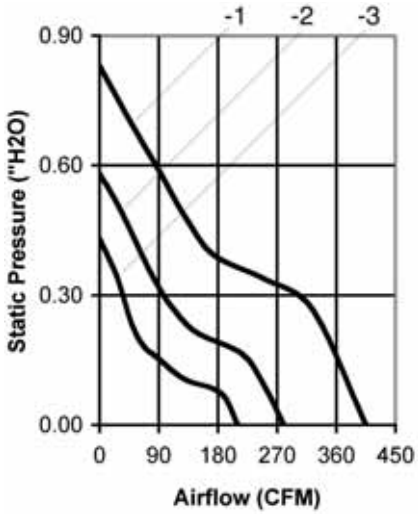

Model Number	Speed (RPM)	Airflow (CFM)	Noise (dB)	Volts AC	Voltage Range	Watts	Max. Static Pressure ("H2O)
OA180APL-11-1 *	3300	405	60	115	60~130	70	0.83
OA180APL-11-2 *	2200	280	47	115	60~130	50	0.58
OA180APL-11-3 *	1650	210	40	115	60~130	38	0.43
OA180APL-22-1 *	3300	405	60	230	120~260	70	0.83
OA180APL-22-2 *	2200	280	47	230	120~260	50	0.58
OA180APL-22-3 *	1650	210	40	230	120~260	38	0.43

* Indicate "TB" for terminal or "WB" for wire leads

OA180AP Series

AC Fan - 115V, 230V
180 x 89mm (7.1" x 3.5")

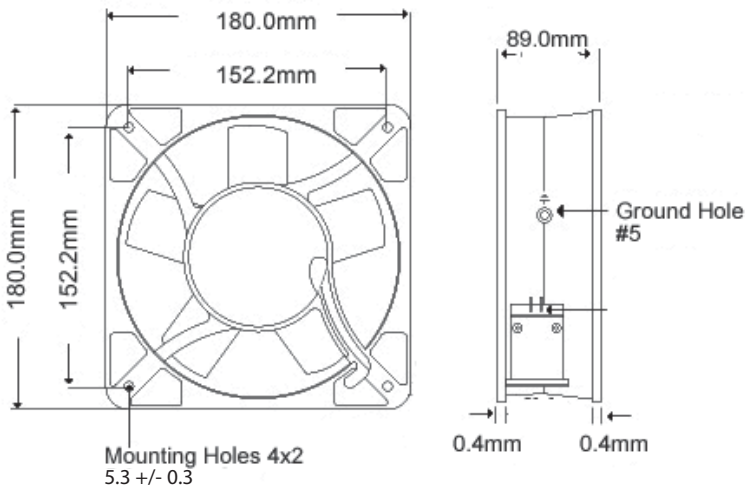

Frame	Diecast Aluminum
Impeller	PBT, UL94V-O plastic
Connection	2x Lead Wires 20 AWG or terminals
Motor	Capacitor drive, thermally protected
Bearing System	Dual ball
Insulation Resistance	>100M ohm between lead-wire and frame (500VDC)
Dielectric Strength	1 min at 1500 VAC, 50/60Hz

Operating Temperature
Ball Bearing
-20C ~ +80C

Life Expectancy
Ball Bearing
60,000 hours (L10 at 40C)

CSA Approved

m0

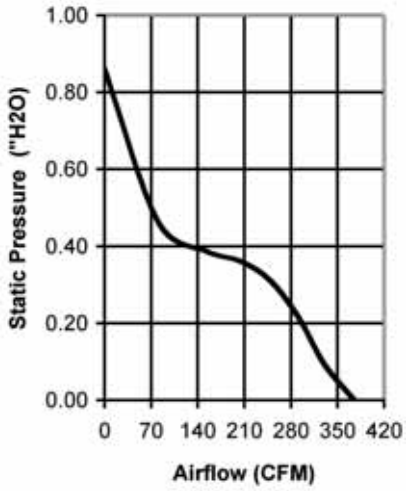

Part Number	OA180AP-11-1 *	OA180AP-22-1 *
Nominal AC Voltage	115 (50/60 Hz)	230
Voltage Range	60 ~ 130 VAC	120 ~ 260 VAC
Rated Power (50/60 Hz)	70 W	70 W
RPM (50/60 Hz)	3350	3350
Airflow - CFM (50/60 Hz)	375	375
Noise Level - dB (50/60 Hz)	62	62
Max. Static Pressure	00.86 "H_2O	0.86 "H_2O

* Indicate "TB" for terminal or "WB" for wire leads

Knight Electronics, Inc.
10557 Metric Drive
Dallas, Texas 75243
214-340-0265

RoHS Compliant

Orion Fans
Information and data is subject to change without prior notification.

OA254 Series

254 x 89mm
(10.0″ x 3.5″)

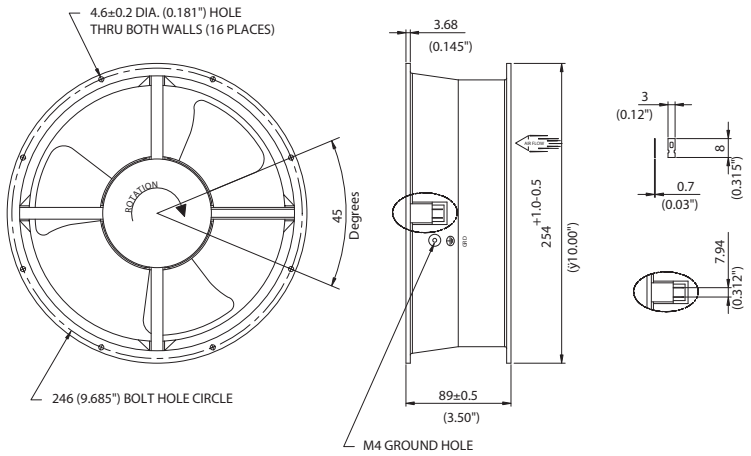

Frame	Diecast Aluminum
Impeller	PBT, UL94V-O plastic
Connection	2x Lead Wires or Terminals
Motor	Capacitor dirve, impedance and thermally protected
Bearing System	Dual ball
Insulation Resistance	>100M ohm between lead-wire and frame (500VDC)
Dielectric Strength	1 min at 1500 VAC, 50/60Hz

Operating Temperature
Ball Bearing
-20C ~ +80C

Life Expectancy
Ball Bearing
60,000 hours (L10 at 40C)

Approvals
UL/cUL: E170149
TUV: R50133700
CE

m2

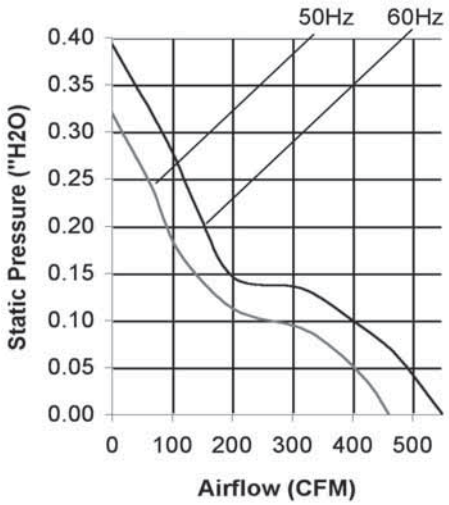

Part Number	OA254AP-11-1 *	OA254AP-22-1 *
Nominal Voltage	115VAC	230VAC
Voltage Range	80 ~ 130VAC	160 ~ 260VAC
Rated Power (50/60 Hz)	31/35 W - (0.30 / 0.29 A)	31/35 W - (0.14 / 0.14 A)
Rated Speed (50/60 Hz)	1400 / 1650	1400 / 1650
Airflow - CFM (50/60 Hz)	460 / 547	460 / 547
Noise Level - dB (50/60 Hz)	52 / 55	52 / 55
Max. Static Pressure (50/60 Hz)	0.32 / 0.39” H_2O	0.32 / 0.39” H_2O

* Indicate “TB” for terminal type or “WB” for Wire leads (300mm)

Knight Electronics, Inc.
10557 Metric Drive
Dallas, Texas 75243
214-340-0265

RoHS Compliant

Orion Fans
Information and data is subject to change without prior notification.

OA254AN Series
High Performance

254 x 89mm
(10.0" x 3.5")

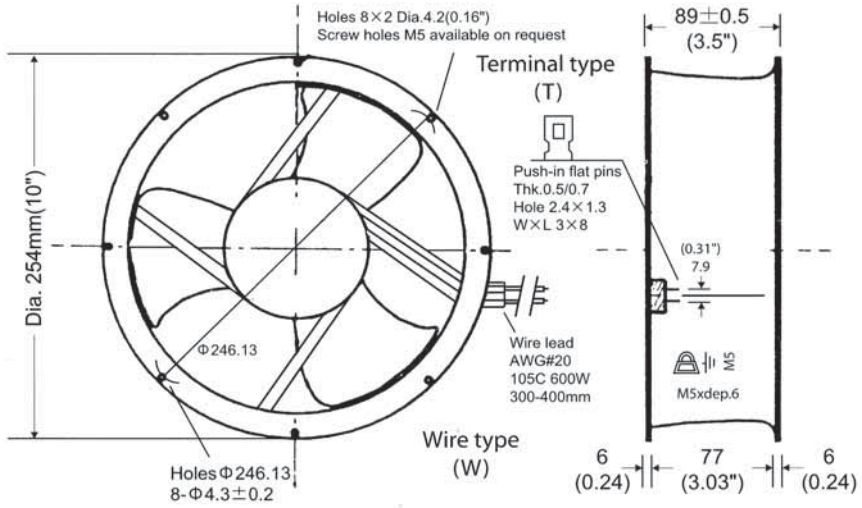

Frame	Diecast Aluminum
Impeller	PBT, UL94V-O plastic
Connection	2x Lead Wires or Terminals
Motor	Capacitor drive, thermally protected
Bearing System	Dual ball
Insulation Resistance	>100M ohm between lead-wire and frame (500VDC)
Dielectric Strength	1 min at 1500 VAC, 50/60Hz

Operating Temperature
Ball Bearing
-20C ~ +80C

Life Expectancy
Ball Bearing
60,000 hours (L10 at 40C)

Approvals
UL/cUL: E170149
TUV: R50133700
CE

m0

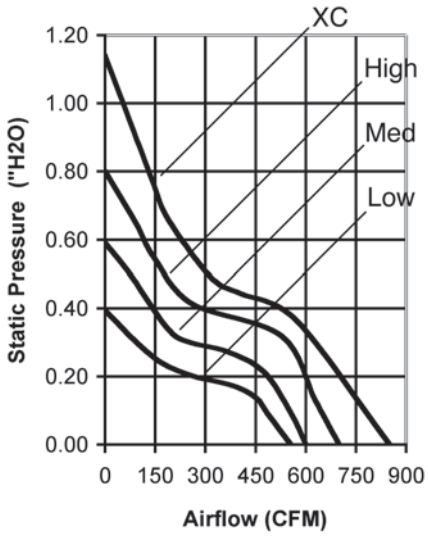

Model Number	Speed (RPM)	Airflow (CFM)	Noise (dB)	Volts AC	Voltage Range	Watts	Max. Static Pressure ("H2O)
OA254AN-11-1 * XC	2700	850	69	115	80~130	75	1.14
OA254AN-11-1 *	2200	700	65	115	80~130	70	0.80
OA254AN-11-2 *	2000	600	55	115	80~130	45	0.59
OA254AN-11-3 *	1100	320	48	115	80~130	32	0.31
OA254AN-22-1 * XC	2700	850	69	230	160~260	75	1.14
OA254AN-22-1 *	2200	700	65	230	160~260	70	0.80
OA254AN-22-2 *	2000	600	55	230	160~260	45	0.59
OA254AN-22-3 *	1100	320	48	230	160~260	32	0.31

* Indicate "TB" for terminal type or "WB" for Wire leads (300mm)

OA225 Series

225 x 80mm
(8.86" x 3.15")

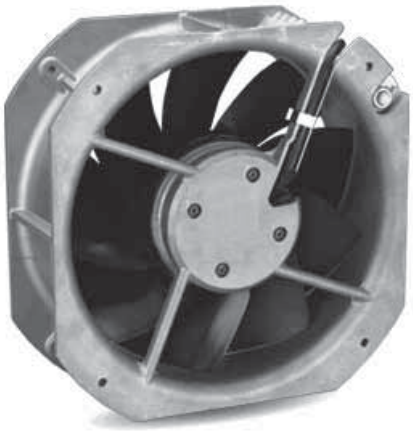

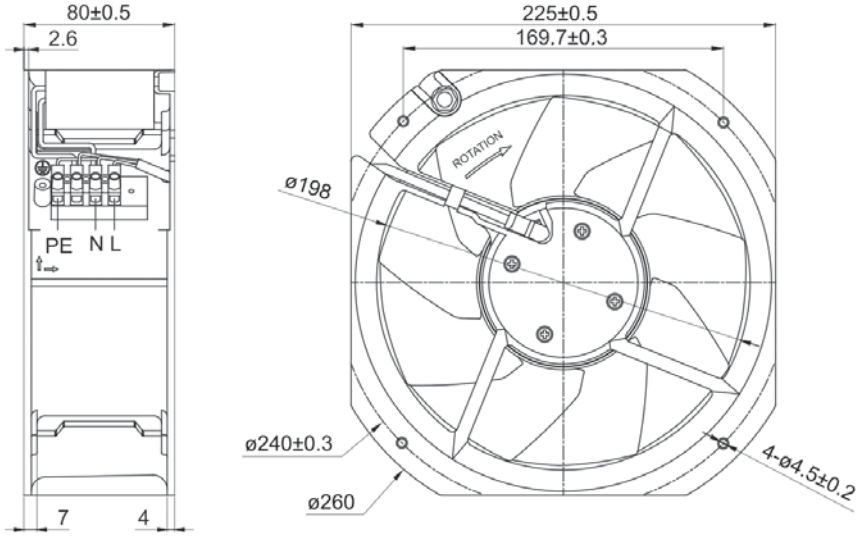

Frame	Diecast Aluminum
Impeller	Metal
Connection	Terminal Block, 18AWG
Motor	Capacitor drive, thermally protected
Bearing System	Dual ball
Insulation	Class F
Dielectric Strength	1 min at 1500 VAC, 50/60Hz

Operating Temperature
Ball Bearing
-40C ~ +60C

Life Expectancy
Ball Bearing
40,000 hours (L10 at 40C)

m2

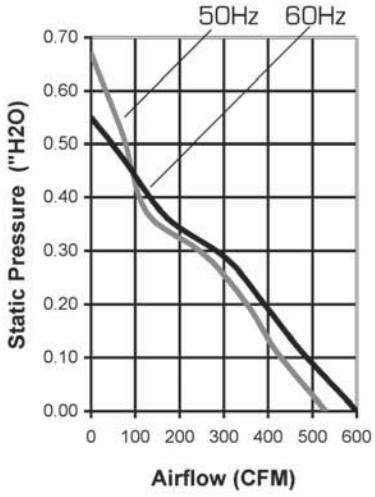

Part Number	OA225AN-11-1TB18	OA225AN-22-1TB18
Nominal Voltage	115VAC	230VAC
Voltage Range	100 ~ 125VAC	200 ~ 240VAC
Rated Power	65 / 72 W	74 / 80 W
Nominal Current	0.58 / 0.70 A	0.29 / 0.35 A
Rated Speed (RPM) 50/60Hz	2550 / 2800	2550 / 2800
Airflow (CFM) 50/60Hz	530 / 600	530 / 600
Noise Level (dB) 50/60HZ	59 / 61	59 / 61
Max. Static Pressure 50/60Hz	0.55" / 0.67" H_2O	0.55" / 0.67" H_2O

Knight Electronics, Inc.
10557 Metric Drive
Dallas, Texas 75243
214-340-0265

RoHS Compliant

Orion Fans
Information and data is subject to change without prior notification.

OA280 Series

280 x 80mm
(11.0″ x 3.15″)

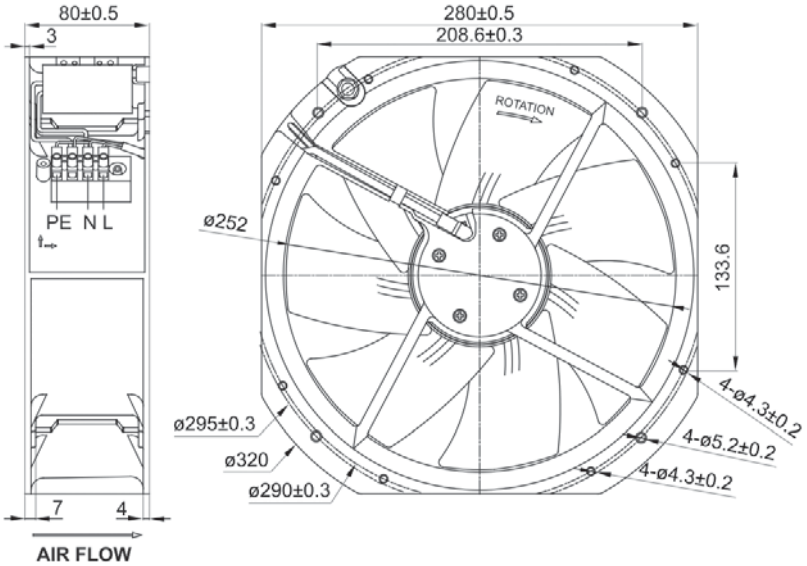

Frame	Diecast Aluminum
Impeller	Metal
Connection	Terminal Block, 18AWG
Motor	Capacitor drive, thermally protected
Bearing System	Dual ball
Insulation	Class F
Dielectric Strength	1 min at 1500 VAC, 50/60Hz

Operating Temperature
Ball Bearing
-40C ~ +60C

Life Expectancy
Ball Bearing
40,000 hours (L10 at 40C)

Approvals
UL/cUL: E170149
TUV: R50133561
CE

m2

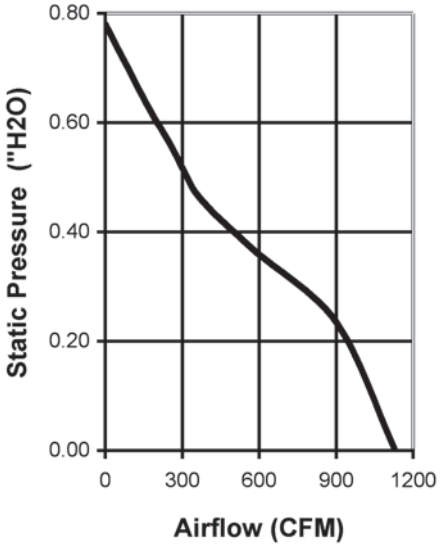

Part Number	OA280AN-11-TB18	OA280AN-22-TB18
Nominal Voltage	115VAC	230VAC
Voltage Range	100 ~ 125VAC	200 ~ 240VAC
Rated Power	148 W	158 W
Nominal Current	1.5 A	0.82 A
Rated Speed (RPM)	2700	2700
Airflow (CFM)	1130	1130
Noise Level (dB)	70	70
Max. Static Pressure	0.78” H_2O	0.78” H_2O

Knight Electronics, Inc.
10557 Metric Drive
Dallas, Texas 75243
214-340-0265

RoHS Compliant

Orion Fans
Information and data is subject to change without prior notification.

OAB190 Series

Motorized Impeller
190 x 70mm (7.5″ x 2.8″)

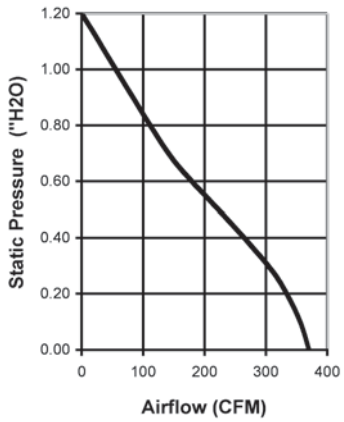

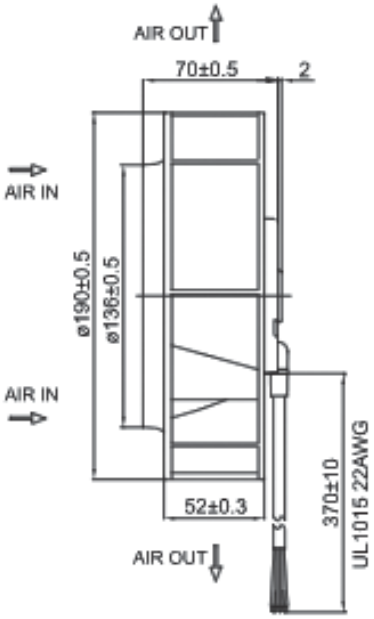

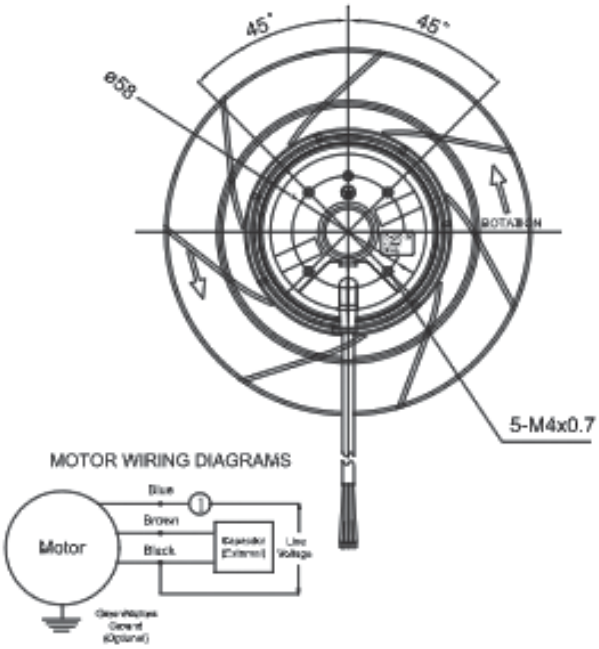

Accessories
Duct ring DR190A

Part Number	OAB190-11-1	OAB190-22-1
Nominal Voltage	120VAC	230VAC
Voltage Range	100 ~ 125VAC	200 ~ 240VAC
Nominal Current	0.54A	0.30A
Locked Current	0.91A	0.45A
Rated Power	65W	72W
Rated Speed (RPM)	2700	2700
Airflow (CFM)	370	370
Noise Level (dB)	63	63
Max. Static Pressure	1.2″ H_2O	1.2″ H_2O
Bearing System	Sealed Dual Ball	Sealed Dual Ball

m2

Frame	Diecast Aluminum
Impeller	UL94V-O Thermoplastic
Connection	2x Lead wires
Motor	AC, Shaded Pole, thermally protected. CAPACITOR INCLUDED
Bearing System	Dual ball bearing
Insulation Resistance	>100M ohm between leadwire and frame (500VDC)
Dielectric Strength	1500VAC for 1 minute
Temperature Range	-40C ~ +60C
Life (L10)	40,000 hrs (L10, 40C)

Knight Electronics, Inc.
10557 Metric Drive
Dallas, Texas 75243
214-340-0265

RoHS Compliant

Orion Fans
Information and data is subject to change without prior notification.

OAB220 Series

Motorized Impeller
220 x 71mm (8.7" x 2.8")

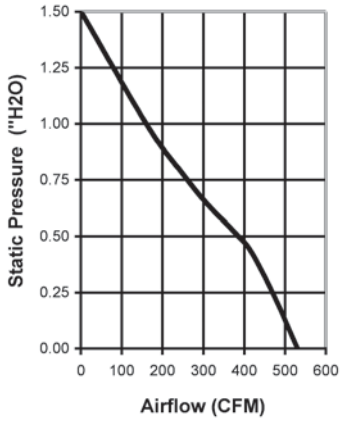

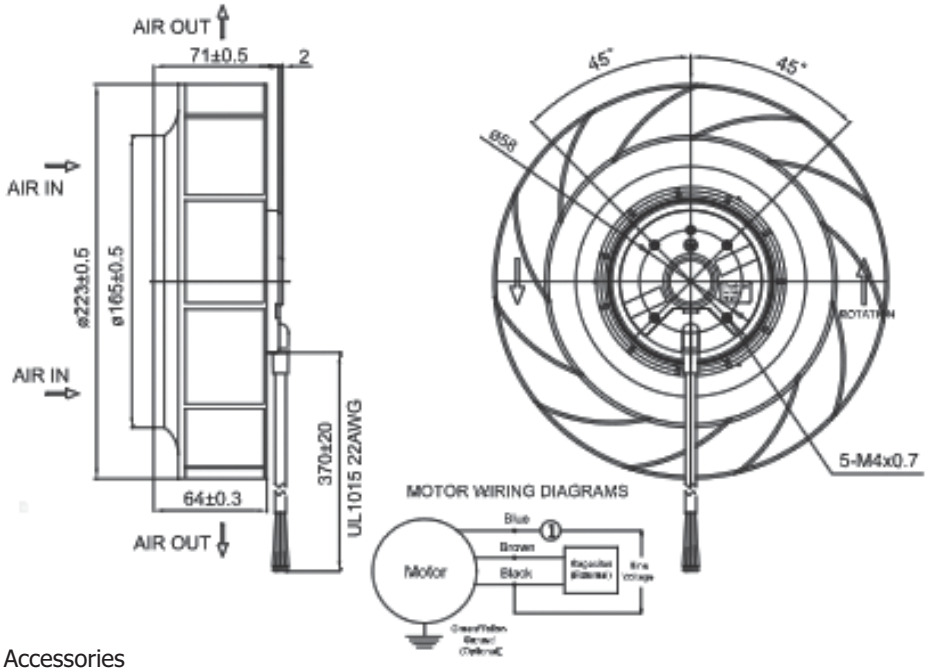

Accessories
Duct ring DR220A

Part Number	OAB220-11-1	OAB220-22-1
Nominal Voltage	115VAC	230VAC
Voltage Range	100 ~ 125VAC	200 ~ 240VAC
Nominal Current	0.98A	0.50A
Locked Current	1.22A	0.58A
Rated Power	117W	117W
Rated Speed (RPM)	2650	2650
Airflow (CFM)	530	530
Noise Level (dB)	70	70
Max. Static Pressure	1.5" H_2O	1.5" H_2O
Bearing System	Sealed Dual Ball	Sealed Dual Ball

m2

Frame	Diecast Aluminum
Impeller	UL94V-O Thermoplastic
Connection	2x Lead wires
Motor	AC, Shaded Pole, themally protected. CAPACITOR INCLUDED
Bearing System	Dual ball bearing
Insulation Resistance	>100M ohm between leadwire and frame (500VDC)
Dielectric Strength	1500VAC for 1 minute
Temperature Range	-40C ~ +60C
Life (L10)	40,000 hrs (L10, 40C)

Knight Electronics, Inc.
10557 Metric Drive
Dallas, Texas 75243
214-340-0265

RoHS Compliant

Orion Fans
Information and data is subject to change without prior notification.

OD2510 Series

DC Fan - 5, 12V
25x10mm (1.0"x 0.39")

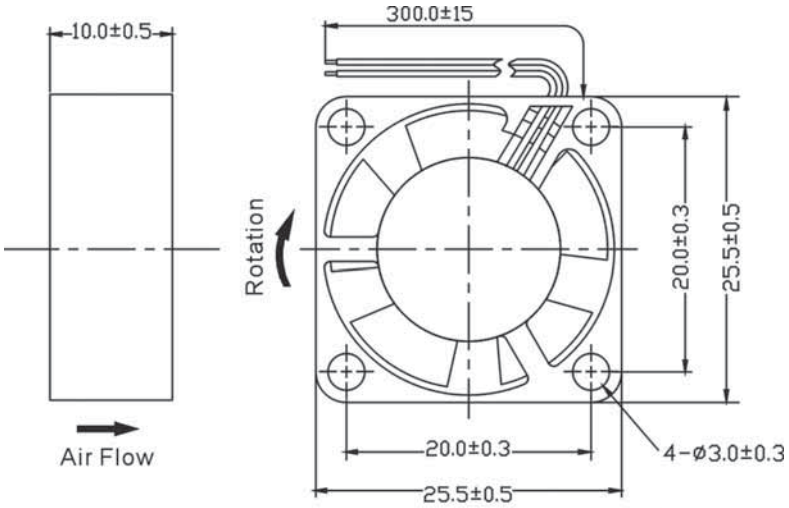

Frame & Impeller	PBT, UL94V-O plastic
Connection	2x Lead wires 28AWG
Motor	Brushless DC, auto restart, impedance and polarity protected
Bearing System	Ball bearing or Sleeve
Insulation Resistance	10M ohm between leadwire and frame (500VDC)
Dielectric Strength	1 second at 500 VAC, max leakage - 500 MicroAmp
Storage Temperature	-30C ~ +90C

Available Options:

Tachometer (Frequency Generator) White Lead

Alarm (Rotation Detector) Yellow Lead

Life Expectancy (L10)
Ball - 60,000 hrs (45C)
Sleeve - 30,000 hrs (45C)

Operating Temperature
Ball: -25 ~ 70C
Sleeve: -10 ~ 50C

m1/ m4

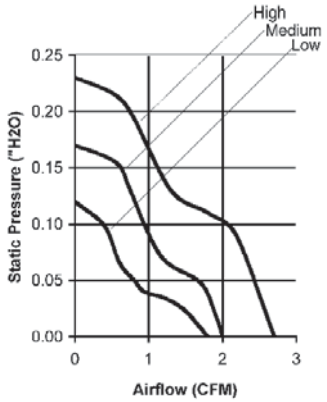

Model Number	Speed (RPM)	Airflow (CFM)	Noise (dB)	Volts DC	Voltage Range (VDC)	Amps	Max. Static Pressure ("H2O)
OD2510-05H *	12000	2.7	31	5	3.5 ~ 6	0.18	0.23
OD2510-05M *	10000	2.2	24	5	3.5 ~ 6	0.12	0.17
OD2510-12H *	12000	2.7	31	12	6.0 ~ 16	0.09	0.23
OD2510-12M *	10000	2.2	24	12	6.0 ~ 16	0.08	0.17
OD2510-12L *	8000	1.8	16	12	6.0 ~ 16	0.04	0.12

* Indicate "B" for ball bearing or "S" for sleeve bearing

OD3010 Series

DC Fan - 5, 12V
30x10mm (1.18"x 0.39")

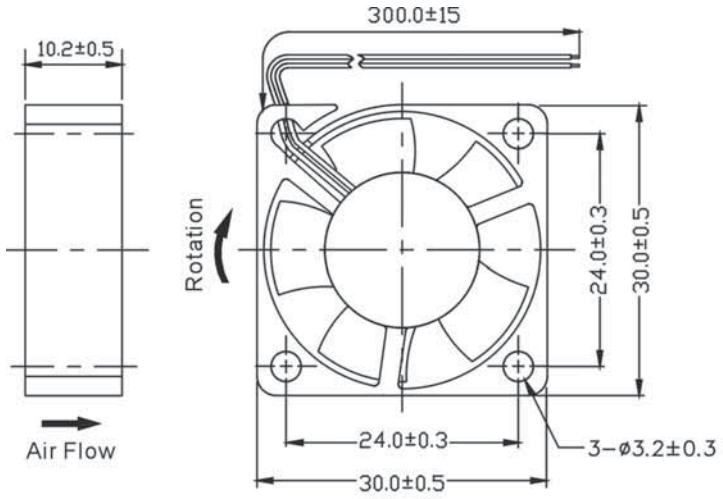

Frame & Impeller	PBT, UL94V-O plastic
Connection	2x Lead wires 28AWG
Motor	Brushless DC, auto restart, impedance and polarity protected
Bearing System	Ball bearing or Sleeve
Insulation Resistance	10M ohm between leadwire and frame (500VDC)
Dielectric Strength	1 second at 500 VAC, max leakage - 500 MicroAmp
Storage Temperature	-30C ~ +90C

Available Options:

Tachometer (Frequency Generator) White Lead

Alarm (Rotation Detector) Yellow Lead

Life Expectancy (L10)
Ball - 60,000 hrs (45C)
Sleeve - 30,000 hrs (45C)

Operating Temperature
Ball: -10 ~ 70C
Sleeve: -10 ~ 60C

m4

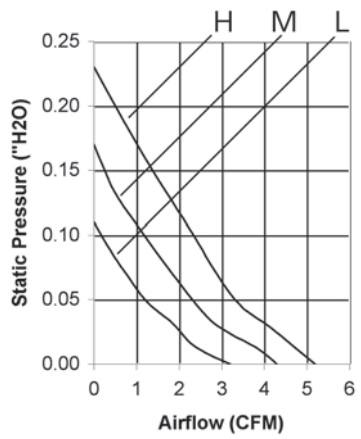

Model Number	Speed (RPM)	Airflow (CFM)	Noise (dB)	Volts DC	Voltage Range (VDC)	Amps	Max. Static Pressure ("H2O)
OD3010-05H *	11000	5.0	32	05	3.5~6.0	.20	.20
OD3010-12H *	11000	5.0	32	12	8~17	.10	.20
OD3010-12M *	9000	4.0	27	12	8~17	.09	.17
OD3010-12L *	7000	3.5	25	12	8~17	.06	.11

* Indicate "B" for ball bearing or "S" for sleeve bearing

OD4010 Series

DC Fan - 5, 12, 24V
40x10mm (1.58"x 0.39")

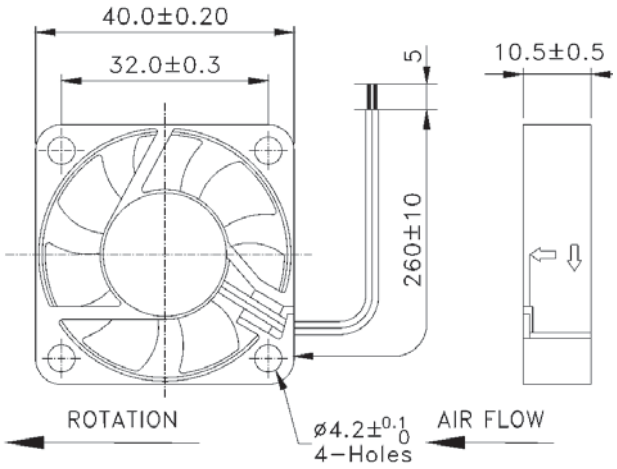

Frame & Impeller	PBT, UL94V-O plastic
Connection	2x Lead wires 26AWG
Motor	Brushless DC, auto restart, impedance and polarity protected
Bearing System	Ball bearing
Insulation Resistance	10M ohm between leadwire and frame (500VDC)
Dielectric Strength	1 second at 500 VAC, max leakage - 500 MicroAmp
Storage Temperature	-30C ~ +90C

Available Options:

Tachometer
Alarm
Thermal control
Sleeve bearing

Life Expectancy (L10)
Ball - 60,000 hrs (45C)
Sleeve - 30,000 hrs (45C)

Operating Temperature
Ball: -20 ~ 80C

m1

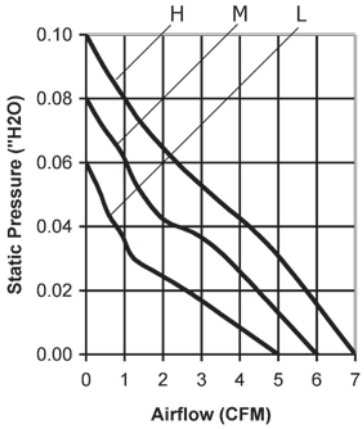

Model Number	Speed (RPM)	Airflow (CFM)	Noise (dB)	Volts DC	Voltage Range (VDC)	Amps	Max. Static Pressure ("H2O)
OD4010-05HB	6000	7	25	5	4 ~ 7	0.16	0.10
OD4010-05MB	4800	6	20	5	4 ~ 7	0.11	0.08
OD4010-05LB	4200	5	14	5	4 ~ 7	0.07	0.06
OD4010-12HB	6000	7	25	12	7 ~ 14	0.09	0.10
OD4010-12MB	4800	6	20	12	7 ~ 14	0.06	0.08
OD4010-12LB	4200	5	14	12	7 ~ 14	0.06	0.06
OD4010-24HB	6000	7	25	24	10 ~ 27	0.06	0.10
OD4010-24MB	4800	6	20	24	10 ~ 27	0.04	0.08
OD4010-24LB	4200	5	14	24	10 ~ 27	0.03	0.06

OD4020 Series

DC Fan - 5, 12, 24V
40x20mm (1.58"x 0.79")

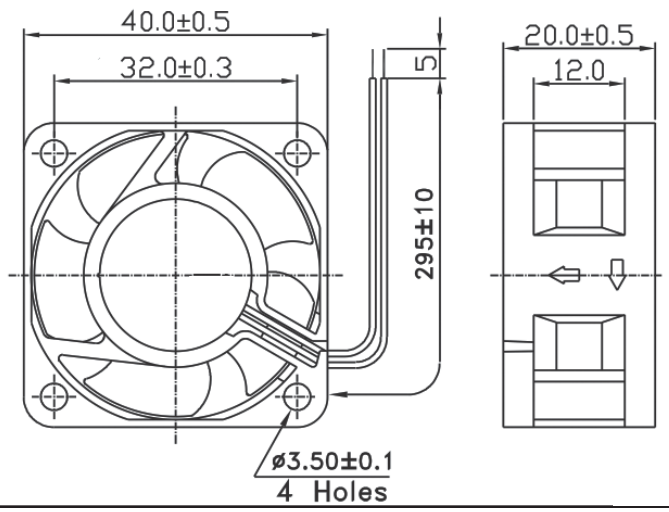

Frame & Impeller	PBT, UL94V-O plastic
Connection	2x Lead wires 26AWG
Motor	Brushless DC, auto restart, impedance and polarity protected
Bearing System	Ball bearing
Insulation Resistance	10M ohm between leadwire and frame (500VDC)
Dielectric Strength	1 second at 500 VAC, max leakage - 500 MicroAmp
Storage Temperature	-30C ~ +90C

Available Options:
Sleeve Bearing
Sealed Sleeve Bearing
Tachometer
Alarm
Thermal control

Life Expectancy (L10)
Ball - 60,000 hrs (45C)
Sleeve - 30,000 hrs (45C)

Operating Temperature
Ball: -20 ~ 80C

m1

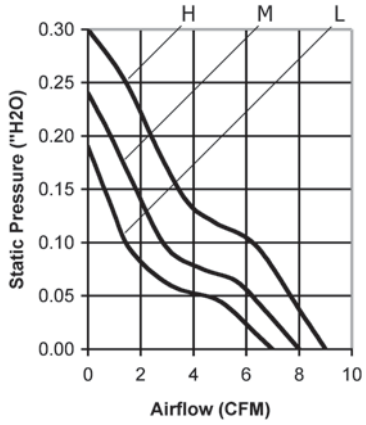

Model Number	Speed (RPM)	Airflow (CFM)	Noise (dB)	Volts DC	Voltage Range (VDC)	Amps	Max. Static Pressure ("H2O)
OD4020-05HB	7800	9	32	5	4 ~ 7	0.25	0.30
OD4020-05MB	6900	8	28	5	4 ~ 7	0.16	0.24
OD4020-05LB	6200	7	24	5	4 ~ 7	0.14	0.19
OD4020-12HB	7800	9	32	12	7 ~ 14	0.10	0.30
OD4020-12MB	6900	8	28	12	7 ~ 14	0.08	0.24
OD4020-12LB	6200	7	24	12	7 ~ 14	0.07	0.19
OD4020-24HB	7800	9	32	24	10 ~ 27	0.07	0.30
OD4020-24MB	6900	8	28	24	10 ~ 27	0.06	0.24
OD4020-24LB	6200	7	24	24	10 ~ 27	0.05	0.19

To indicate sleeve bearing replace "B" suffix with "S" in part number (25,000 hrs life expectancy)
To indicate sealed sleeve bearing replace "B" with "SS" in part number (45,000 hrs life expectancy)

Knight Electronics, Inc.
10557 Metric Drive
Dallas, Texas 75243
214-340-0265

RoHS Compliant

Orion Fans
Information and data is subject to change without prior notification.

OD4028 Series

DC Fan - 5, 12, 24V
40x28mm (1.58"x 1.10")

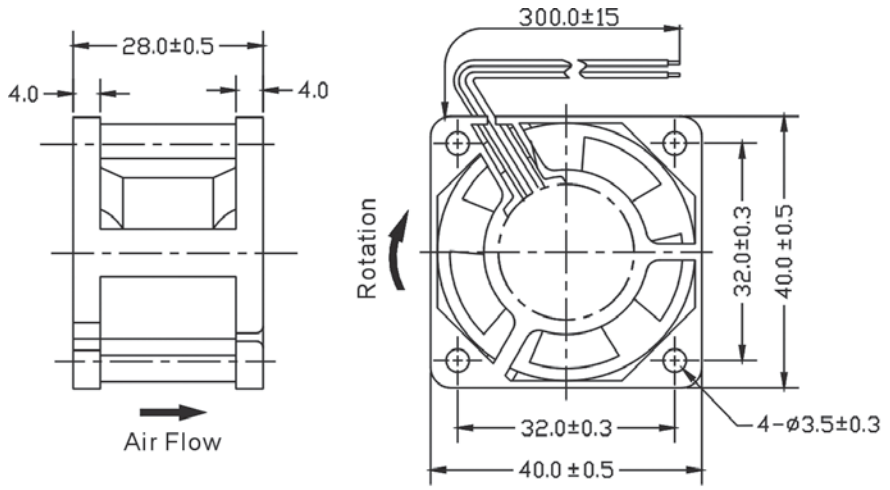

Frame & Impeller	PBT, UL94V-O plastic
Connection	2x Lead wires 26AWG
Motor	Brushless DC, auto restart, impedance and polarity protected
Bearing System	Ball bearing or Sleeve
Insulation Resistance	10M ohm between leadwire and frame (500VDC)
Dielectric Strength	1 second at 500 VAC, max leakage - 500 MicroAmp
Storage Temperature	-30C ~ +90C

Available Options:

Tachometer (FG)
Alarm (RD)
PWM (Pulse Width Modulated speed control)
Thermistor (Thermal Speed Control)

Life Expectancy (L10)
Ball - 60,000 hrs (45C)
Sleeve - 30,000 hrs (45C)

Operating Temperature
Ball: -20 ~ 80C
Sleeve: -10 ~ 50C

m4

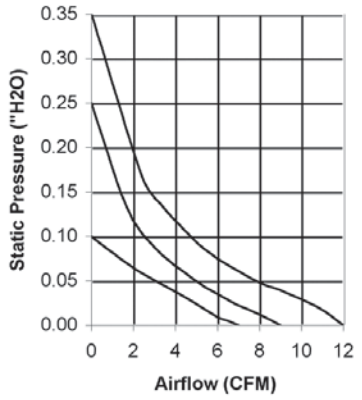

(5V not shown)

Model Number	Speed (RPM)	Airflow (CFM)	Noise (dB)	Volts DC	Voltage Range (VDC)	Amps	Max. Static Pressure ("H2O)
OD4028-05H *	7500	10	32	5	4~7	0.35	0.24
OD4028-05M *	6500	9	29	5	4~7	0.30	0.17
OD4028-05L *	5000	7	25	5	4~7	0.22	0.10
OD4028-12H *	8800	12	37	12	7~14	0.20	0.32
OD4028-12M *	8000	11	35	12	7~14	0.18	0.25
OD4028-12L *	5000	7	25	12	7~14	0.12	0.10
OD4028-24H *	8800	12	37	24	10~27	0.16	0.32
OD4028-24M *	8000	11	35	24	10~27	0.12	0.25
OD4028-24L *	5000	7	25	24	10~27	0.09	0.10

* Indicate "B" for ball bearing or "S" for sleeve bearing

OD4028 "XC Series'

DC Fan - 12V, High Speed
40x28mm (1.58" x 1.10")

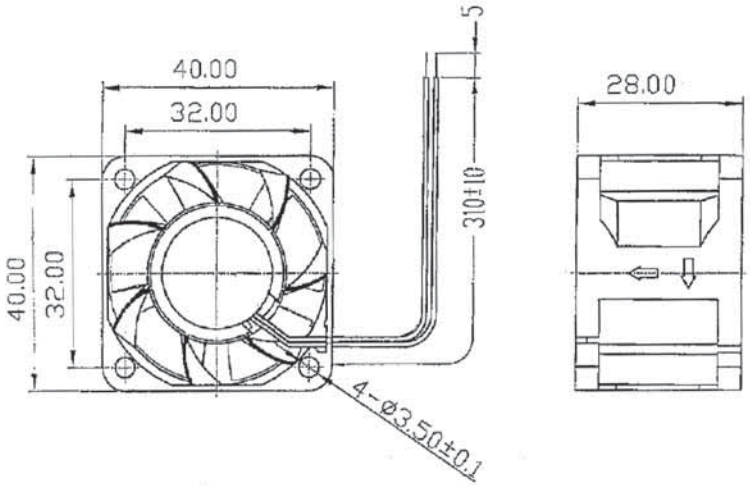

Frame & Impeller	PBT, UL94V-O plastic
Connection	2x Lead wires
Motor	Brushless DC, auto restart, polarity protected.
Bearing System	Dual ball bearing
Insulation Resistance	Min. 10M at 500VDC
Dielectric Strength	1 minute at 500VAC / 1 second, max leakage 500 microamp
Temperature Range	-10C ~ +70C
Storage Temperature	-40C ~ +80C
Life (L10)	50,000 hours (40C)

Available Options:

Tachometer (FG)
Alarm (RD)
PWM (Pulse Width Modulated speed control)
Thermistor (Thermal Speed Control)

m1

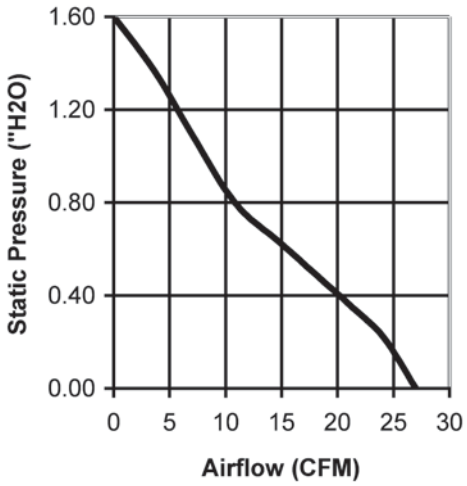

Part Number	OD4028-12HB-XC
Nominal Voltage	12 VDC
Voltage Range	10.8 ~ 13.2 VDC
Nominal Current	0.8 A
Start-up Voltage	9.0 VDC
Rated Power	9.5 W
Rated Speed (RPM)	16,000
Airflow (CFM)	26.5
Noise Level (dB)	57
Max. Static Pressure	1.60" H_2O

Frame style: m1

Knight Electronics, Inc.
10557 Metric Drive
Dallas, Texas 75243
214-340-0265

RoHS Compliant

Orion Fans
Information and data is subject to change without prior notification.

OD5210 Series

DC Fan - 5, 12V
52x10mm (2.05"x 0.39")

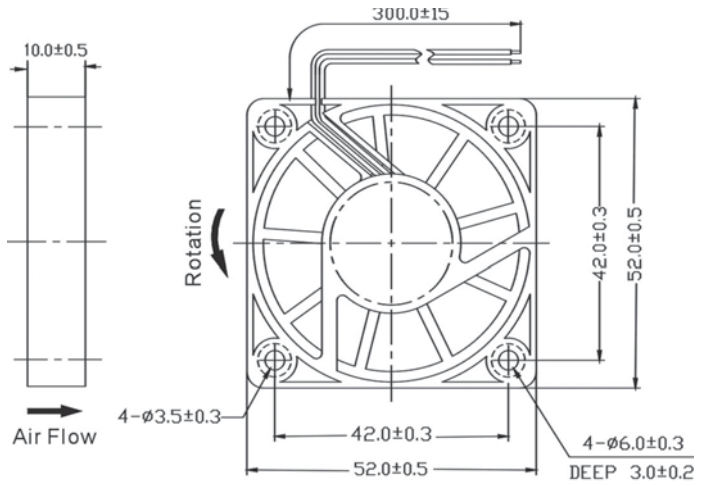

Frame & Impeller	PBT, UL94V-O plastic
Connection	2x Lead wires 26AWG
Motor	Brushless DC, auto restart, impedance and polarity protected
Bearing System	Ball bearing or Sleeve
Insulation Resistance	10M ohm between leadwire and frame (500VDC)
Dielectric Strength	1 second at 500 VAC, max leakage - 500 MicroAmp
Storage Temperature	-40C+80C

Available Options:

Tachometer
Alarm

Life Expectancy (L10)
Ball - 60,000 hrs (45C)
Sleeve - 30,000 hrs (45C)

Operating Temperature
Ball: -10 + 80C
Sleeve: -10 ~ 50C

m4 (m1)

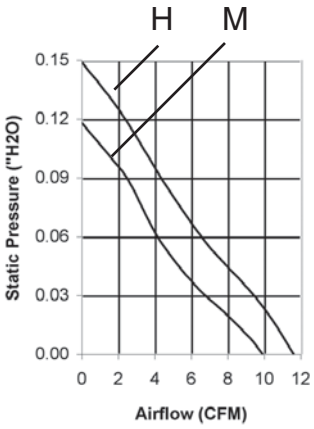

Model Number	Speed (RPM)	Airflow (CFM)	Noise (dB)	Volts DC	Voltage Range (VDC)	Amps	Max. Static Pressure ("H2O)
OD5210-05H *	6000	12	36	5	4~7	.25	.14
OD5210-05M *	5000	10	32	5	4~7	.21	.11
OD5210-12H *	6000	12	36	12	8~17	.14	.14
OD5210-12M *	5000	10	32	12	8~17	.12	.11

* Indicate "B" for ball bearing or "S" for sleeve bearing

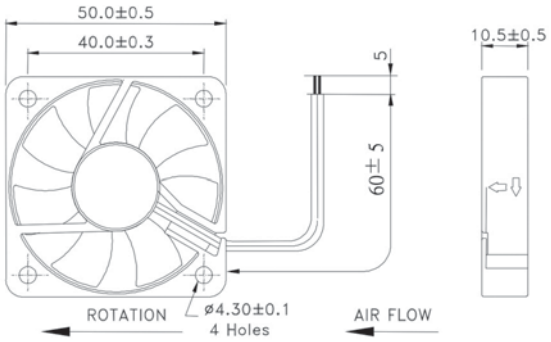

Also available with a 50mm frame. Call for details

Knight Electronics, Inc.
10557 Metric Drive
Dallas, Texas 75243
214-340-0265

RoHS Compliant

Orion Fans
Information and data is subject to change without prior notification.

OD6010 Series

DC Fan - 5V, 12V
60x10mm (2.36"x 0.39")

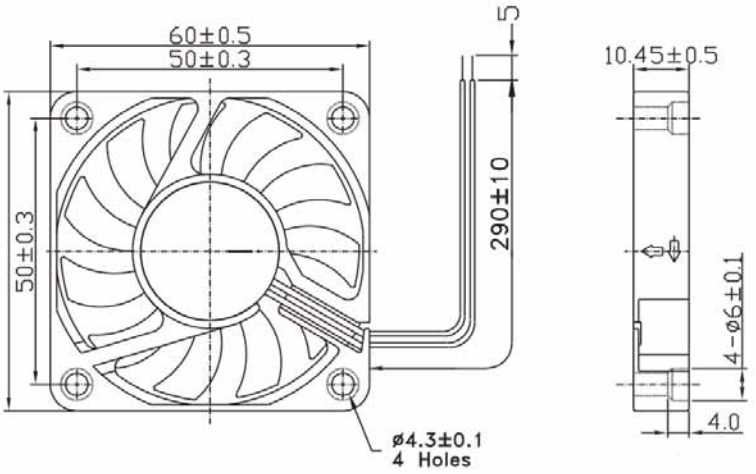

Frame & Impeller	PBT, UL94V-O plastic
Connection	2x Lead wires 24AWG
Motor	Brushless DC, auto restart, impedance and polarity protected
Bearing System	Ball bearing or Sleeve
Insulation Resistance	10M ohm between leadwire and frame (500VDC)
Dielectric Strength	1 second at 500 VAC, max leakage - 500 MicroAmp
Storage Temperature	-30C ~ +90C

Available Options:

Tachometer
Alarm
24V

Life Expectancy (L10)
Ball - 60,000 hrs (45C)
Sleeve - 30,000 hrs (45C)

Operating Temperature
Ball: -20 ~ 80C
Sleeve: -10 ~ 50C

m1

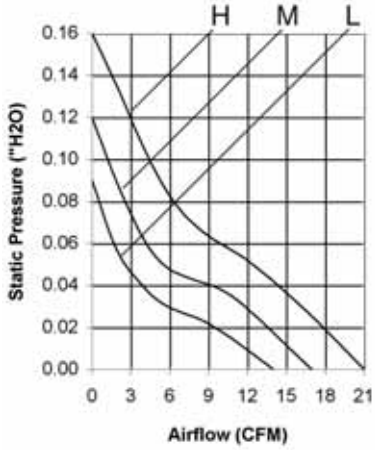

Model Number	Speed (RPM)	Airflow (CFM)	Noise (dB)	Volts DC	Input Power (W)	Amps	Max. Static Pressure ("H2O)
OD6010-05M *	4000	17	31	5	1.65	0.33	0.12
OD6010-05L *	3400	14	26	5	1.30	0.26	0.09
OD6010-12H *	4600	21	36	12	3.00	0.25	0.16
OD6010-12M *	4000	17	31	12	1.92	0.16	0.12
OD6010-12L *	3400	14	26	12	1.20	0.10	0.09

* Indicate "B" for ball bearing or "S" for sleeve bearing

OD6015 Series

DC Fan - 12V
60x15mm (2.36"x 0.59")

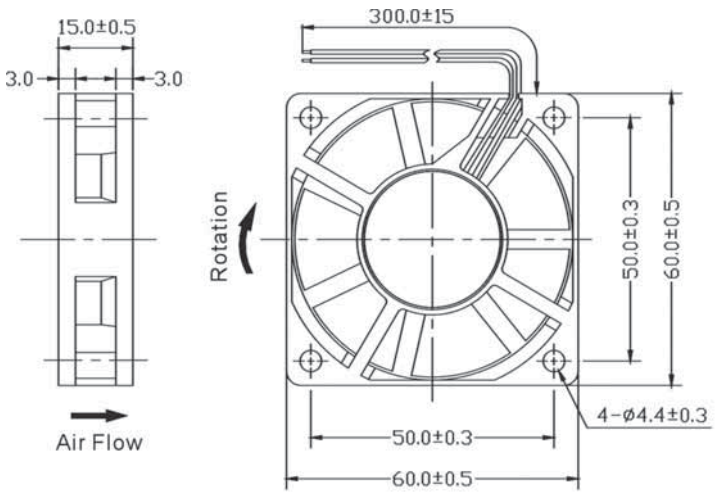

Frame & Impeller	PBT, UL94V-O plastic
Connection	2x Lead wires
Motor	Brushless DC, auto restart, impedance and polarity protected
Bearing System	Dual Ball or Sleeve
Insulation Resistance	10M ohm between leadwire and frame (500VDC)
Dielectric Strength	1 second at 500 VAC, max leakage - 500 MicroAmp
Storage Temperature	-30C ~ +90C

Available Options:
Tachometer (FG)
Alarm (RD)
Other frame styles available
5V and 24V available on request

Life Expectancy (L10)
Ball Bearing
60,000 hours (L10 at 40C)
Sleeve Bearing
30,000 hours (L10 at 40C)

Operating Temperature
Ball Bearing
-20C ~ +80C
Sleeve Bearing
-10C ~ +50C

m1

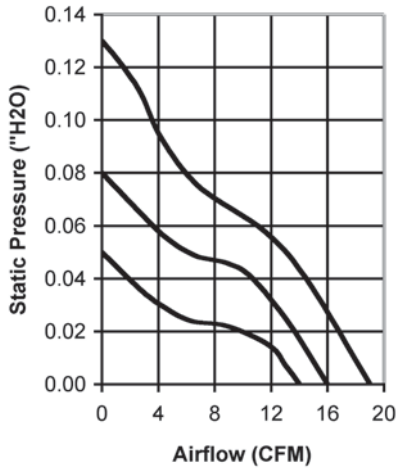

Model Number	Speed (RPM)	Airflow (CFM)	Noise (dB)	Volts DC	Voltage Range	Amps	Max. Static Pressure ("H2O)
OD6015-05H*	4500	19	37	5	3.5~5.75	.40	.13
OD6015-12H*	4500	19	37	12	8~17	.12	.13
OD6015-12M*	4000	16	21	12	8~17	.09	.08
OD6015-12L*	2500	14	18	12	8~17	.06	.05
OD6015-24H*	4500	19	37	24	12~28	.15	.13

* Indicate "B" to specify Ball bearing or "S" to specify Sleeve bearing

OD6020 Series

DC Fan - 12, 24V
60x20mm (2.36"x .79")

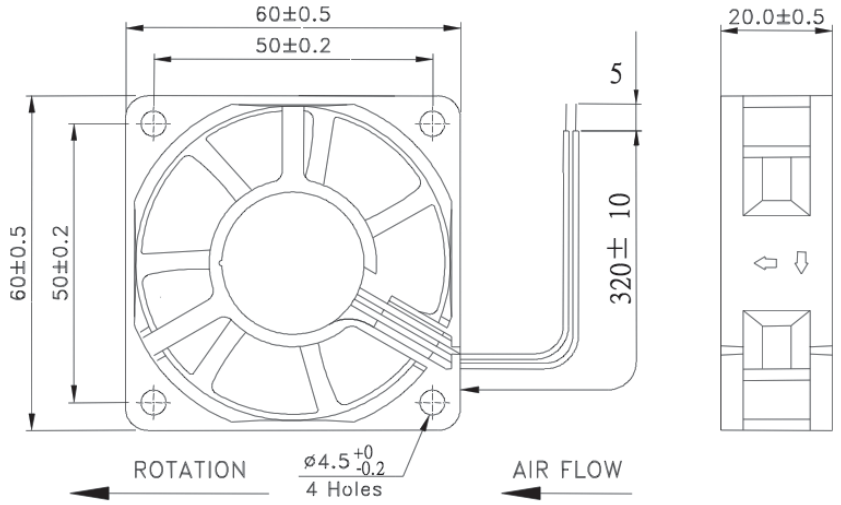

Frame & Impeller	PBT, UL94V-O plastic
Connection	2x Lead wires
Motor	Brushless DC, auto restart, impedance and polarity protected
Bearing System	Dual Ball or Sleeve
Insulation Resistance	10M ohm between leadwire and frame (500VDC)
Dielectric Strength	1 second at 500 VAC, max leakage - 500 MicroAmp
Storage Temperature	-30C ~ +90C

Available Options:
Tachometer
Alarm
Other frame styles available
5V available on request

Life Expectancy (L10)
Ball Bearing
60,000 hours (L10 at 40C)
Sleeve Bearing
30,000 hours (L10 at 40C)

Operating Temperature
Ball Bearing
-20C ~ +80C
Sleeve Bearing
-10C ~ +50C

m1

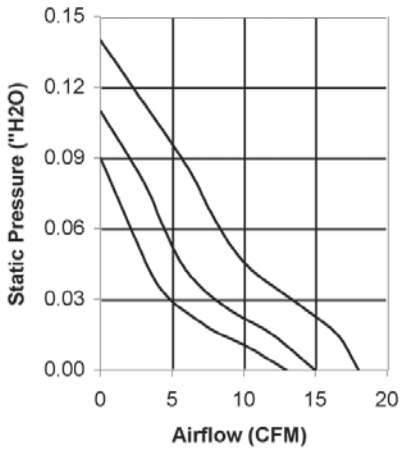

Model Number	Speed (RPM)	Airflow (CFM)	Noise (dB)	Volts DC	Voltage Range	Amps	Max. Static Pressure ("H2O)
OD6020-12H*	4500	18	30	12	8~16	.16	.14
OD6020-12M*	3900	15	26	12	8~16	.13	.11
OD6020-12L*	3500	13	22	12	8~16	.08	.09
OD6020-24H*	4500	18	30	24	12~32	.09	.14
OD6020-24M*	3900	15	26	24	12~32	.06	.11
OD6020-24L*	3500	13	22	24	12~32	.04	.09

* Indicate "B" to specify Ball bearing or "S" to specify Sleeve bearing

Knight Electronics, Inc.
10557 Metric Drive
Dallas, Texas 75243
214-340-0265

RoHS Compliant

Orion Fans
Information and data is subject to change without prior notification.

OD6025 Series

DC Fan - 12, 24V
60x25mm (2.36"x 1.0")

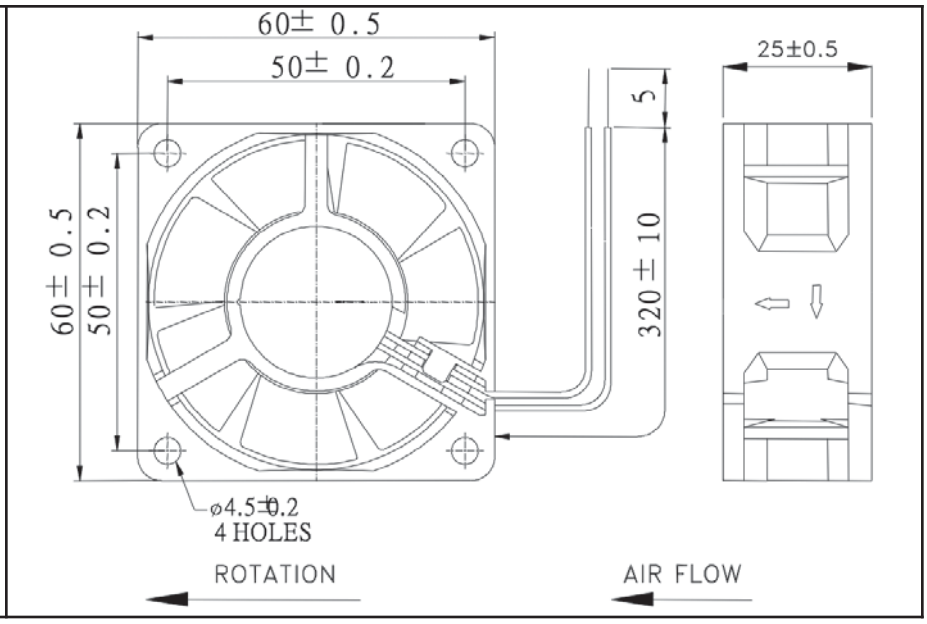

Frame & Impeller	PBT, UL94V-O plastic
Connection	2x Lead wires 24AWG
Motor	Brushless DC, auto restart, polarity protected
Bearing System	Ball bearing or Sleeve
Insulation Resistance	10M ohm between leadwire and frame (500VDC)
Dielectric Strength	1 second at 500 VAC, max leakage - 500 MicroAmp

Available Options:

Tachometer
Alarm

Life Expectancy (L10)
Ball - 60,000 hrs (45C)
Sleeve - 30,000 hrs (45C)

Operating Temperature
Ball: -10 ~ 70C
Sleeve: -10 ~ 60C

m1

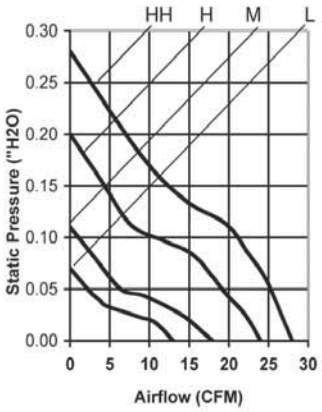

Model Number	Speed (RPM)	Airflow (CFM)	Noise (dB)	Volts DC	Input Power (Watts)	Amps	Max. Static Pressure ("H2O)
OD6025-05H*	4000	20	30	5	1.4	0.28	0.17
OD6025-12HH *	5100	28	40	12	3.1	0.25	0.24
OD6025-12H *	4500	24	35	12	2.8	0.23	0.20
OD6025-12M *	3500	18	27	12	1.7	0.14	0.11
OD6025-12L *	2500	13	18	12	1.0	0.08	0.07
OD6025-24HH *	5100	28	40	24	3.9	0.16	0.24
OD6025-24H *	4500	24	35	24	3.5	0.15	0.20
OD6025-24M *	3500	18	27	24	1.9	0.08	0.11
OD6025-24L *	2500	13	18	24	1.0	0.06	0.07
OD6025-48H*	4200	28	30	48	3.4	0.07	0.24

* Indicate "B" for ball bearing or "S" for sleeve bearing

Knight Electronics, Inc.
10557 Metric Drive
Dallas, Texas 75243
214-340-0265

RoHS Compliant

Orion Fans
Information and data is subject to change without prior notification.

OD6038 'VA' Series'
Vane Axial High Pressure

DC Vanaxial Fan
60x38mm (2.36"x 1.5")

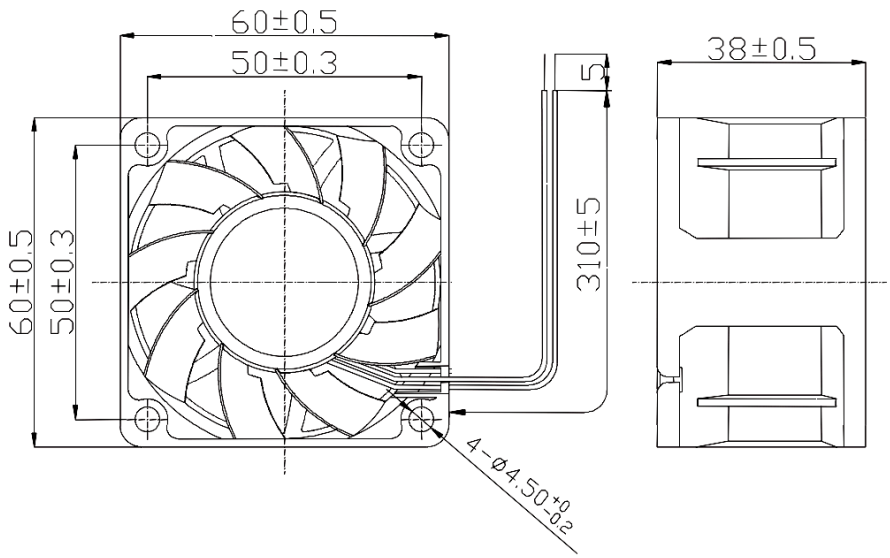

Frame & Impeller	PBT, UL94V-O plastic
Connection	2x Lead wires, Red(+), Black (-)
Motor	Brushless DC, auto restart, polarity protected.
Bearing System	Dual ball bearing
Insulation Resistance	Min. 10M at 500VDC
Dielectric Strength	1 minute at 500VAC / 1 second, max leakage 500 microamp
Temperature Range	-10C ~ +70C
Storage Temperature	-40C ~ +80C
Life (L10)	50,000 hours (40C)

m1

Available Options

Tachometer (FG)

Locked Rotor Alarm (RD)

Thermal Control

Other speeds and voltages available by special order

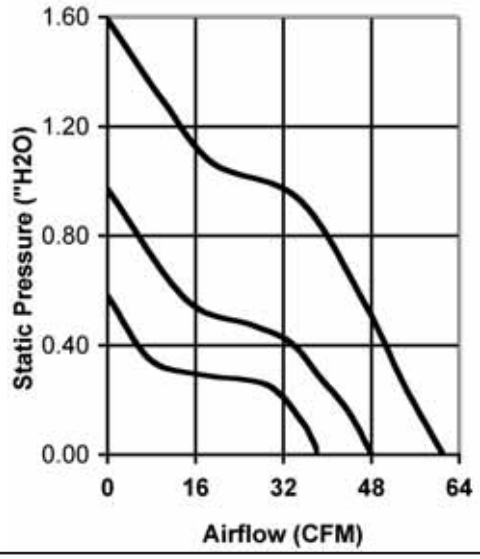

Model Number	Speed (RPM)	Airflow (CFM)	Noise (dB)	Volts DC	Power (Watts)	Amps	Max. Static Pressure (ìH$_2$O)
OD6038-HB-VXC	10000	61	64	12	17	1.42	1.59
OD6038-MB-VXC	8000	48	58	12	8	0.64	0.97
OD6038-LB-VXC	6000	38	50	12	3	0.28	0.58
OD6038-HB-VXC	10000	61	64	24	21	0.88	1.59
OD6038-MB-VXC	8000	48	58	24	10	0.43	0.97
OD6038-LB-VXC	6000	38	50	24	4	0.20	0.58

Knight Electronics, Inc.
10557 Metric Drive
Dallas, Texas 75243
214-340-0265

RoHS Compliant

Orion Fans
Information and data is subject to change without prior notification.

OD8015 Series

DC Fan - 12, 24V
80x15mm (3.15"x 0.59")

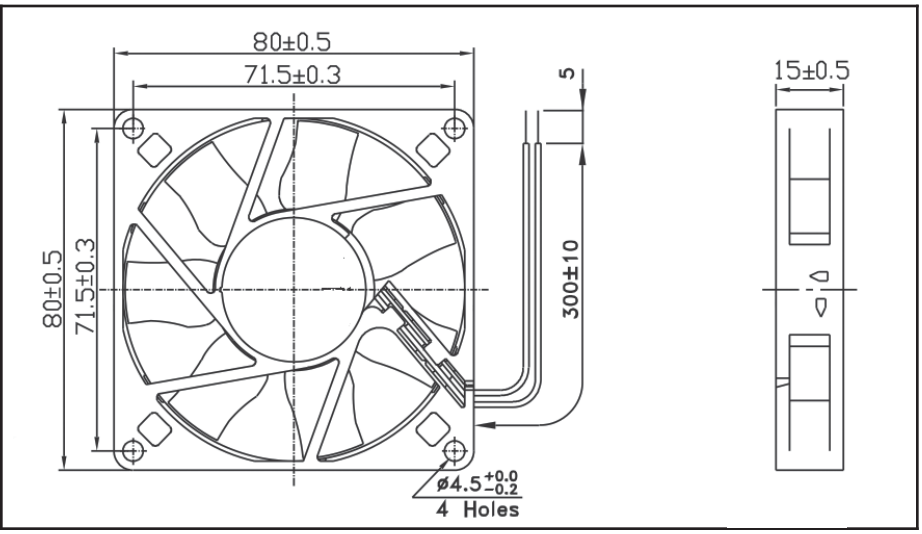

Frame & Impeller	PBT, UL94V-O plastic
Connection	2x Lead wires 26AWG
Motor	Brushless DC, auto restart, impedance and polarity protected
Bearing System	Ball bearing or Sleeve
Insulation Resistance	10M ohm between leadwire and frame (500VDC)
Dielectric Strength	1 second at 500 VAC, max leakage - 500 MicroAmp
Storage Temperature	-30C ~ +90C

Available Options:
Tachometer (FG)
Alarm (RD)

Life Expectancy (L10)
Ball - 60,000 hrs (45C)
Sleeve - 30,000 hrs (45C)

Operating Temperature
Ball: -20 ~ 80C
Sleeve: -10 ~ 50C

m1

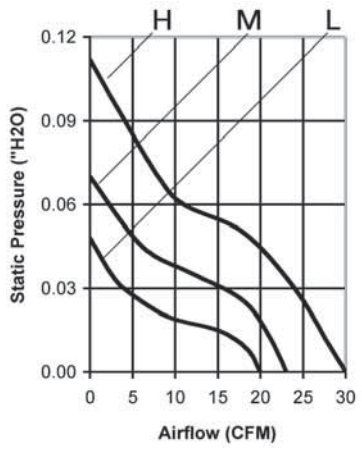

Model Number	Speed (RPM)	Airflow (CFM)	Noise (dB)	Volts DC	Voltage Range (VDC)	Amps	Max. Static Pressure ("H2O)
OD8015-12H*	3200	30	33	12	8~16	0.09	0.11
OD8015-12M*	2500	23	26	12	8~16	0.05	0.07
OD8015-12L*	2000	20	20	12	8~16	0.03	0.05
OD8015-24H*	3200	30	33	24	18~28	0.04	0.11
OD8015-24M*	2500	23	26	24	18~28	0.08	0.07

* Indicate "B" for ball bearing or "S" for sleeve bearing

OD8025 Series

DC Fan
80x25mm (3.15"x 1.0")

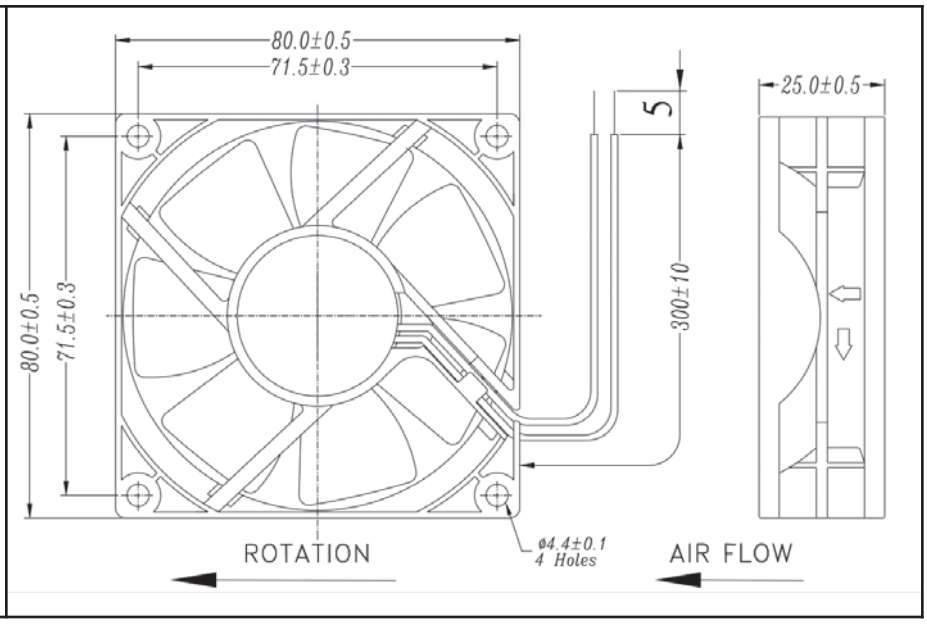

Frame & Impeller	PBT, UL94V-O plastic
Connection	2x Lead wires 24AWG
Motor	Brushless DC, auto restart, polarity protected
Bearing System	Dual ball bearing
Insulation Resistance	10M ohm between leadwire and frame (500VDC)
Dielectric Strength	1 second at 500 VAC, max leakage - 500 MicroAmp
Temperature Range	-10C ~ +70C
Life (L10)	65,000 hours (45C)

Available Options:
Tachometer (FG)
Alarm (RD)

Thermal Speed Control
(Thermistor)

PWM Input
(Manual Speed Control)

Sleeve bearing
IP55
48V
5V

m1

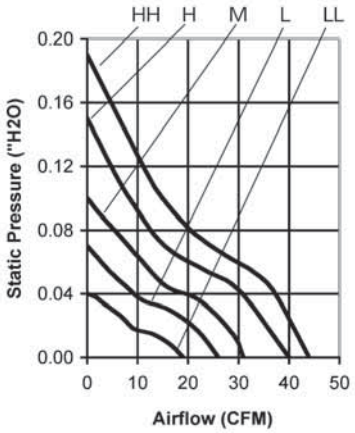

Model Number	Speed (RPM)	Airflow (CFM)	Noise (dB)	Volts DC	Input Power (Watts)	Amps	Max. Static Pressure ("H2O)
OD8025-12HHB	3400	44	40	12	3.11	0.26	0.19
OD8025-12HB	3100	40	35	12	2.90	0.25	0.15
OD8025-12MB	2500	31	28	12	1.45	0.15	0.10
OD8025-12LB	2100	26	23	12	0.96	0.08	0.07
OD8025-12LLB	1600	19	15	12	0.49	0.04	0.04
OD8025-24HB	3100	40	35	24	2.41	0.11	0.16
OD8025-24MB	2500	31	28	24	1.67	0.08	0.10
OD8025-24LB	2100	26	23	24	0.96	0.05	0.07

Knight Electronics, Inc.
10557 Metric Drive
Dallas, Texas 75243
214-340-0265

RoHS Compliant

Orion Fans
Information and data is subject to change without prior notification.

OD8032 Series

DC Fan - 12, 24, 48V
80x32mm (3.15"x 1.25")

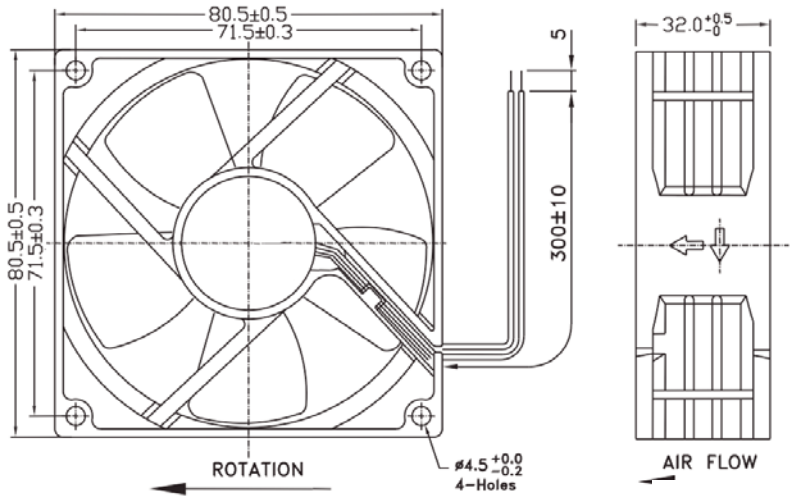

Frame & Impeller	PBT, UL94V-O plastic
Connection	2x Lead wires
Motor	Brushless DC, auto restart, polarity protected
Bearing System	Dual Ball or Sleeve
Insulation Resistance	10M ohm between leadwire and frame (500VDC)
Dielectric Strength	1 second at 500 VAC, max leakage - 500 MicroAmp
Storage Temperature	-30C ~ +90C

Available Options:
Tachometer (FG)
Alarm (RD)
Thermal Speed Control (Thermistor)
PWM Input

Life Expectancy (L10)
Ball Bearing
60,000 hours (L10 at 40C)
Sleeve Bearing
30,000 hours (L10 at 40C)

Operating Temperature
Ball Bearing
-20C ~ +80C
Sleeve Bearing
-10C ~ +50C

m1

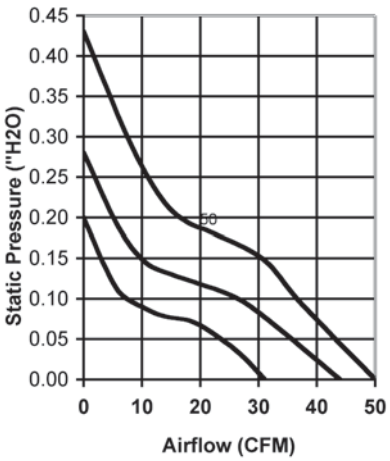

Model Number	Speed (RPM)	Airflow (CFM)	Noise (dB)	Volts DC	Voltage Range	Amps	Max. Static Pressure ("H2O)
OD8032-12H*	3800	50	40	12	8~17	0.55	0.43
OD8032-12M*	3400	44	36	12	8~17	0.45	0.28
OD8032-12L*	3000	40	31	12	8~17	0.35	0.20
OD8032-24H*	3800	50	40	24	12~30	0.38	0.43
OD8032-24M*	3400	44	36	24	12~30	0.28	0.28
OD8032-24L*	3000	40	31	24	12~30	0.23	0.20
OD8032-48H*	3800	50	40	48	24~56	0.16	0.43
OD8032-48M*	3400	44	36	48	24~56	0.10	0.28
OD8032-48L*	3000	40	31	48	24~56	0.08	0.20

* Indicate "B" to specify Ball bearing or "S" to specify Sleeve bearing

Knight Electronics, Inc.
10557 Metric Drive
Dallas, Texas 75243
214-340-0265

RoHS Compliant

Orion Fans
Information and data is subject to change without prior notification.

OD8038 Series

DC Fan
80x38mm (3.15"x 1.5")

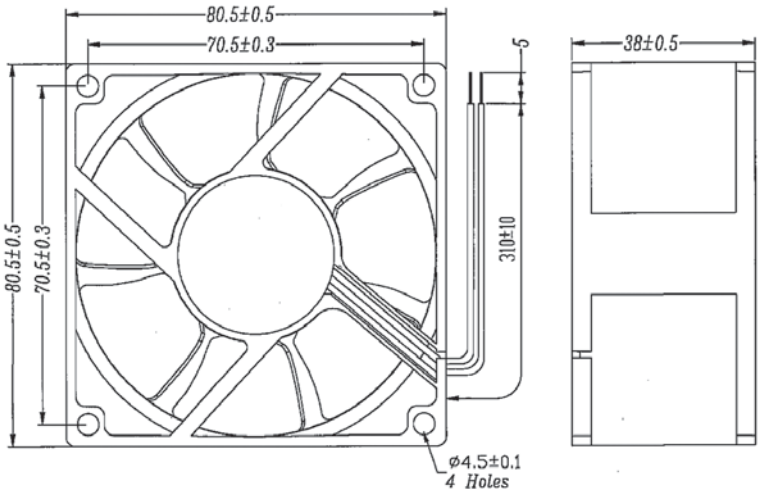

Frame & Impeller	PBT, UL94V-O plastic
Connection	2x Lead wires, Red(+), Black (-)
Motor	Brushless DC, auto restart, polarity protected.
Bearing System	Dual ball bearing
Insulation Resistance	Min. 10M at 500VDC
Dielectric Strength	1 minute at 500VAC / 1 second, max leakage 500 microamp
Temperature Range	-10C ~ +70C
Storage Temperature	-40C ~ +80C
Life (L10)	50,000 hours (40C)

Available Options:
Tachometer (FG)
Alarm (RD)
Thermal Speed Control (Thermistor)
48V available

m1

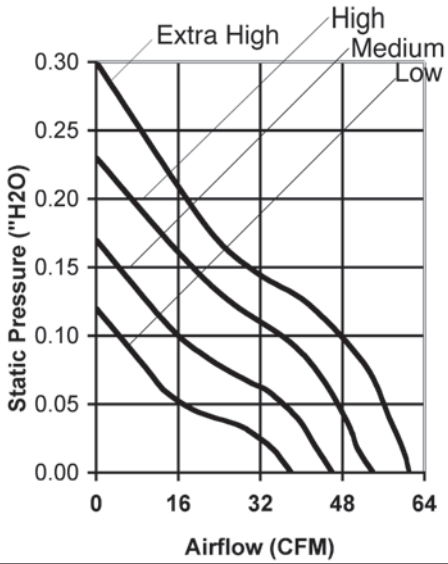

Model Number	Speed (RPM)	Airflow (CFM)	Noise (dB)	Volts DC	Power (Watts)	Amps	Max. Static Pressure ("H2O)
OD8038-12HHB	4000	61	44	12	6.2	0.52	0.30
OD8038-12HB	3500	54	40	12	3.9	0.33	0.23
OD8038-12MB	3000	46	36	12	2.5	0.21	0.17
OD8038-12LB	2500	38	32	12	1.7	0.14	0.12
OD8038-24HB	3500	54	40	24	5.8	0.14	0.23
OD8038-24MB	3000	46	36	24	4.3	0.10	0.17
OD8038-24LB	2500	38	32	24	3.4	0.08	0.12

OD8038 'VA' Series
Vane Axial High Pressure

DC Fan
80x38mm (3.15"x 1.5")

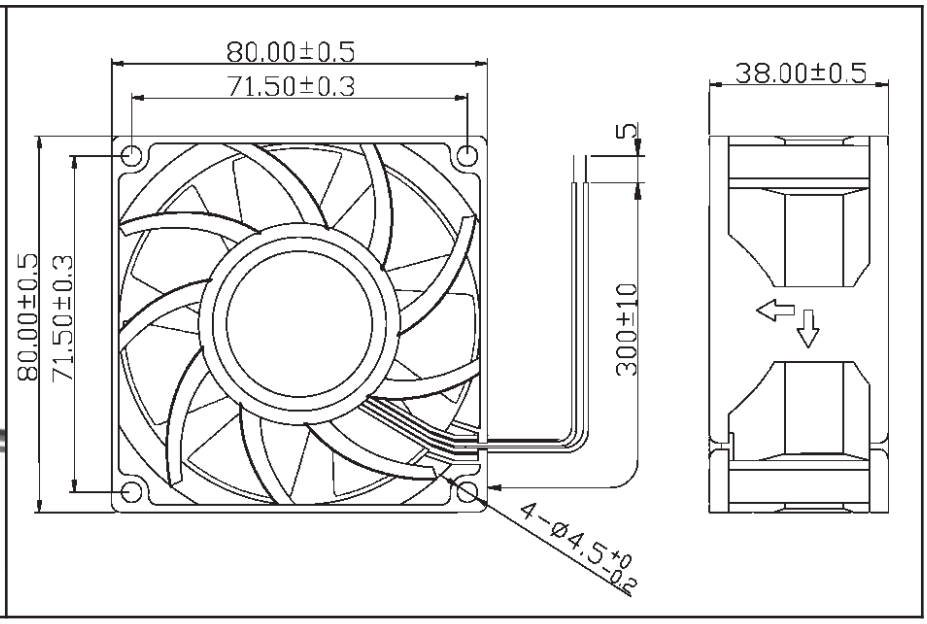

Frame & Impeller	PBT, UL94V-O plastic
Connection	2x Lead wires, Red(+), Black (-)
Motor	Brushless DC, auto restart, polarity protected.
Bearing System	Dual ball bearing
Insulation Resistance	Min. 10M at 500VDC
Dielectric Strength	1 minute at 500VAC / 1 second, max leakage 500 microamp
Temperature Range	-10C ~ +70C
Storage Temperature	-40C ~ +80C
Life (L10)	50,000 hours (40C)

Available Options:

Tachometer (FG)

Locked Rotor Alarm (RD)

Thermal Control

PWM

m1

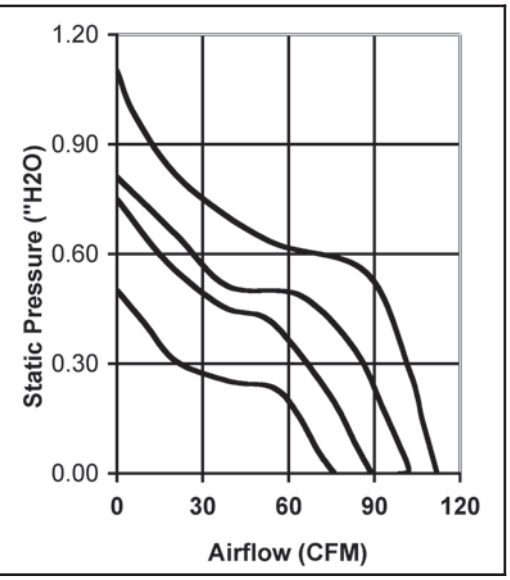

Model Number	Speed (RPM)	Airflow (CFM)	Noise (dB)	Volts DC	Power (Watts)	Amps	Max. Static Pressure ("H2O)
OD8038-12HHB-VXC	7100	112	60	12	22	1.9	1.10
OD8038-12HB-VXC	6300	99	57	12	14	1.2	0.81
OD8038-12MB-VXC	5600	89	54	12	10	0.8	0.75
OD8038-12LB-VXC	4900	76	51	12	6	0.5	0.50
OD8038-24HB-VXC	6300	99	57	24	13	0.5	0.81
OD8038-24MB-VXC	5600	89	54	24	10	0.4	0.75
OD8038-24LB-VXC	4900	76	51	24	7	0.3	0.50
OD8038-48HB-VXC	6300	99	57	48	14	0.3	0.81
OD8038-48MB-VXC	5600	89	54	48	10	0.2	0.75
OD8038-48LB-VXC	4900	76	51	48	7	0.15	0.50

Knight Electronics, Inc.
10557 Metric Drive
Dallas, Texas 75243
214-340-0265

RoHS Compliant

Orion Fans
Information and data is subject to change without prior notification.

OD9220 Series

12, 24V DC Fan
92x20mm (3.6”x 0.79”)

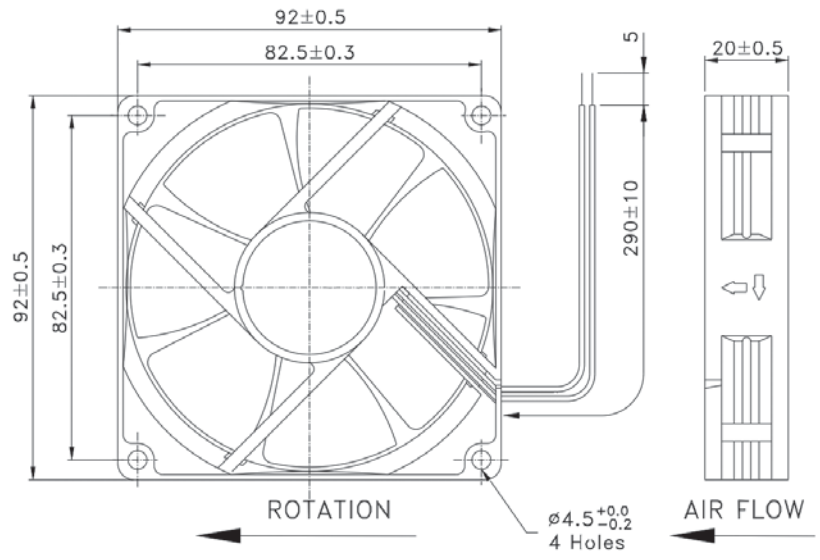

Frame & Impeller	PBT, UL94V-O plastic
Connection	2x Lead wires 24AWG
Motor	Brushless DC, auto restart, polarity protected
Bearing System	Dual ball bearing
Insulation Resistance	10M ohm between leadwire and frame (500VDC)
Dielectric Strength	1 second at 500 VAC, max leakage - 500 MicroAmp
Temperature Range	-10C ~ +70C
Life (L10)	65,000 hours (45C)

Available Options:

Tachometer - Open Collector

Locked Rotor Alarm

m1

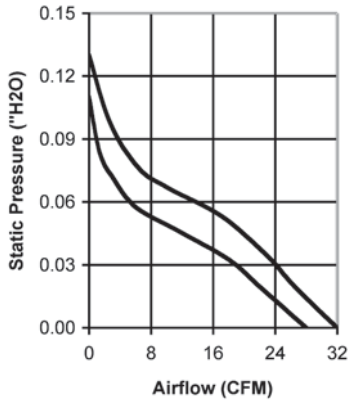

Model Number	Speed (RPM)	Airflow (CFM)	Noise (dB)	Volts DC	Voltage Range	Amps	Max. Static Pressure (“H2O)
OD9220-12H*	2700	32	33	12	8~16	0.25	0.13
OD9220-12M*	2400	28	31	12	8~16	0.16	0.11
OD9220-24H*	2700	32	33	24	12~28	0.14	0.125
OD9220-24M*	2400	28	31	24	12~28	0.12	0.11

* Indicate “B” to specify Ball bearing or “S” to specify Sleeve bearing

OD9225 Series

DC Fan - 12V & 24V
92x25 (3.62"x 1.00")

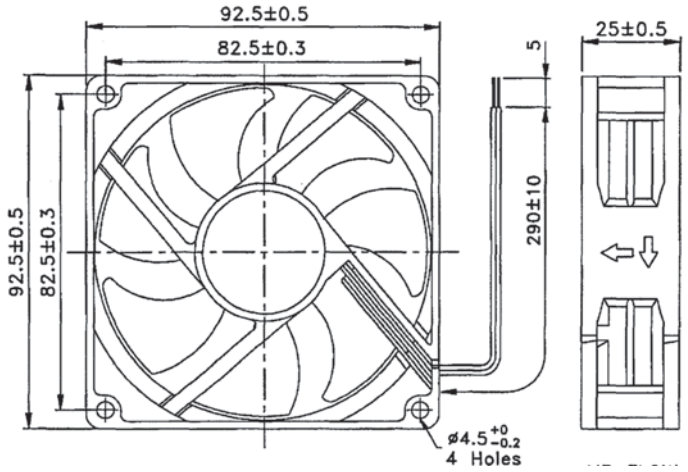

Frame & Impeller	PBT, UL94V-O plastic
Connection	2x Lead wires
Motor	Brushless DC, auto restart, polarity protected
Bearing System	Dual Ball
Insulation Resistance	10M ohm between leadwire and frame (500VDC)
Dielectric Strength	1 second at 500 VAC, max leakage - 500 MicroAmp
Storage Temperature	-30C ~ +90C

Available Options:
Tachometer (FG)
Alarm (RD)
Thermal Control
Sleeve Bearing
05V
Extra Low Speed (LL)

Life Expectancy (L10)
Ball Bearing
60,000 hours (L10 at 40C)

Operating Temperature
Ball Bearing
-20C ~ +80C

m1

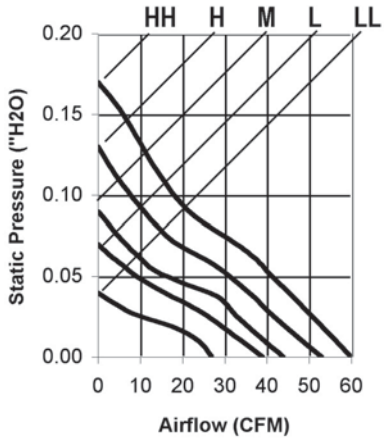

Model Number	Speed (RPM)	Airflow (CFM)	Noise (dB)	Volts DC	Voltage Range	Amps	Max. Static Pressure ("H2O)
OD9225-12HHB	3300	60	40	12	7~17	0.29	0.17
OD9225-12HB	2900	53	35	12	7~17	0.25	0.13
OD9225-12MB	2400	44	31	12	7~17	0.17	0.09
OD9225-12LB	2100	39	28	12	7~17	0.13	0.07
OD9225-24HB	2900	53	35	24	12~28	0.15	0.13
OD9225-24MB	2400	44	31	24	12~28	0.12	0.09
OD9225-24LB	2100	39	28	24	12~28	0.08	0.07
OD9225-48HB	2800	50	33	48	32~56	0.09	0.24

Knight Electronics, Inc.
10557 Metric Drive
Dallas, Texas 75243
214-340-0265

RoHS Compliant

Orion Fans
Information and data is subject to change without prior notification.

OD9238 'VA' Series'
Vane Axial High Pressure

DC Fan - 12V, 24V and 48V
92x38mm (3.62" x 1.5")i

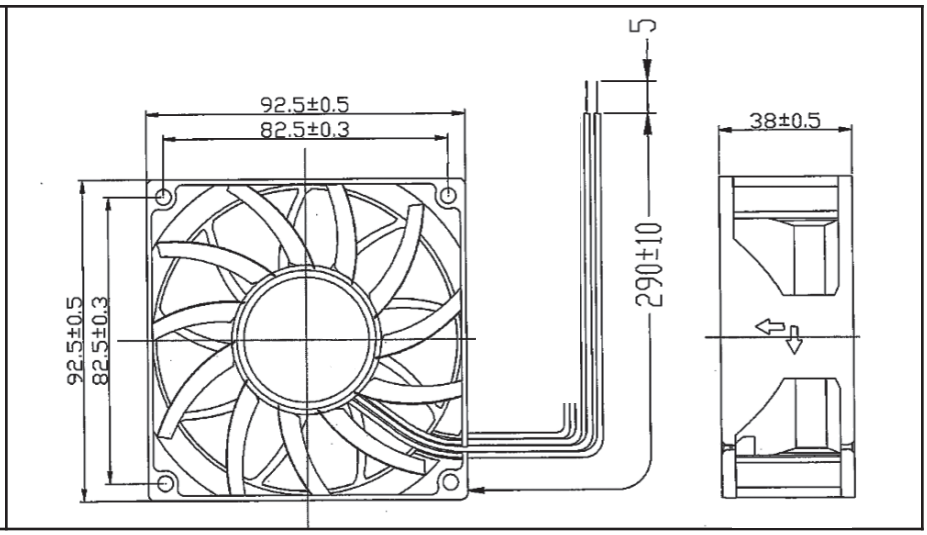

Frame & Impeller	PBT, UL94V-O plastic
Connection	2x Lead wires, 290mm, UL1007, AWG 24
Motor	Brushless DC, auto restart, polarity protected.
Bearing System	Dual ball bearing
Insulation Resistance	Min. 10M at 500VDC
Dielectric Strength	1 minute at 500VAC / 1 second, max leakage 500 microamp
Temperature Range	-10C ~ +70C
Storage Temperature	-40C ~ +80C
Life Expectancy (L10)	50,000 hours (40C)

Available Options:

Tachometer (FG)
Alarm
PWM

Super High Speed
(150CFM)

m1

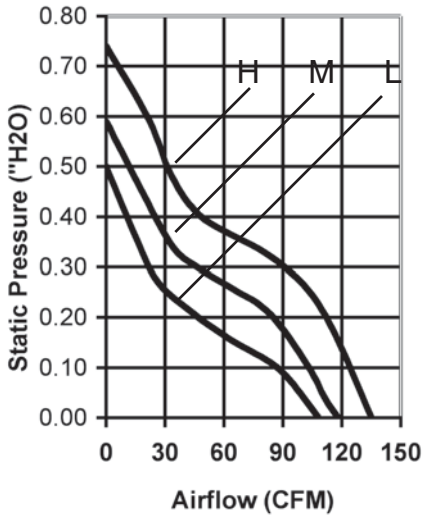

Model Number	Speed (RPM)	Airflow (CFM)	Noise (dB)	Volts DC	Input Power (Watts)	Amps	Max. Static Pressure ("H2O)
OD9238-12HBVXC	5400	135	58	12	16	1.3	0.74
OD9238-12MBVXC	4800	118	55	12	11	0.9	0.59
OD9238-12LBVXC	4400	108	52	12	9	0.7	0.50
OD9238-24HBVXC	5400	135	58	24	16	0.7	0.74
OD9238-24MBVXC	4800	118	55	24	11	0.5	0.59
OD9238-24LBVXC	4400	108	52	24	8	0.3	0.50
OD9238-48HBVXC	5400	135	58	48	17	0.4	0.74
OD9238-48MBVXC	4800	118	55	48	12	0.3	0.59
OD9238-48LBVXC	4400	108	52	48	9	0.2	0.50

Knight Electronics, Inc.
10557 Metric Drive
Dallas, Texas 75243
214-340-0265

RoHS Compliant

Orion Fans
Information and data is subject to change without prior notification.

OD1225 Series

DC Fan - 12V, 24V
120x25mm (4.7"x 1.0")

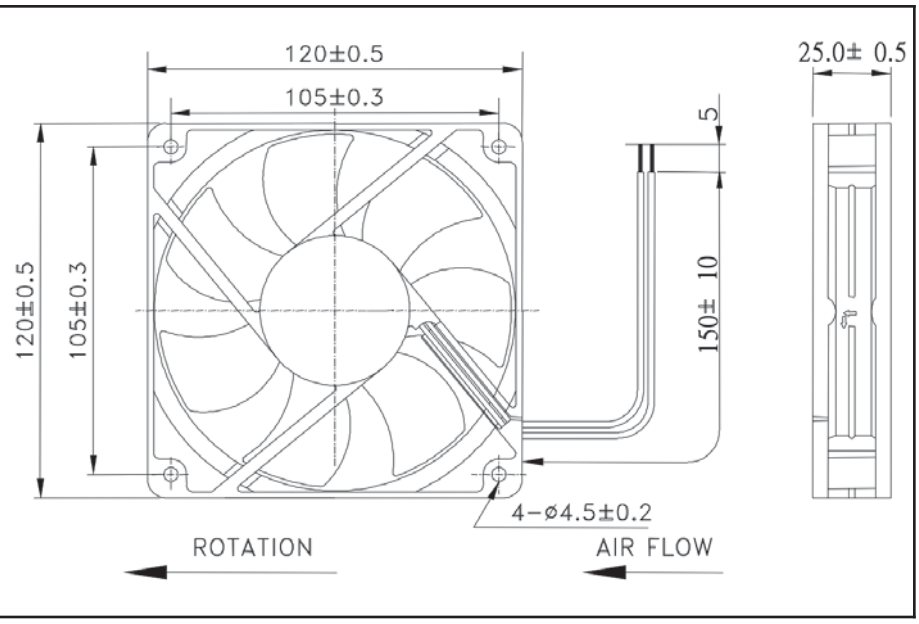

Frame & Impeller	PBT, UL94V-O plastic
Connection	2x Lead wires 24AWG
Motor	Brushless DC, auto restart, polarity protected
Bearing System	Dual ball bearing
Insulation Resistance	10M ohm between leadwire and frame (500VDC)
Dielectric Strength	1 second at 500 VAC, max leakage - 500 MicroAmp
Temperature Range	-10C ~ +70C
Life (L10)	65,000 hours (45C)

Available Options:

Tachometer,
Alarm,
Thermal control
IP55 Water Resistance
48V

m1

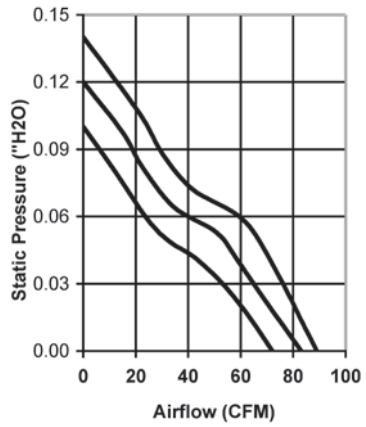

Model Number	Speed (RPM)	Airflow (CFM)	Noise (dB)	Volts DC	Input Power (Watts)	Amps (max)	Max. Static Pressure ("H2O)
OD1225-12HB	2200	89	39	12	5	0.37	0.14
OD1225-12MB	2050	83	38	12	4	0.33	0.12
OD1225-12LB	1800	72	34	12	3	0.24	0.10
OD1225-24HB	2200	89	39	24	5	0.19	0.14
OD1225-24MB	2050	83	38	24	4	0.17	0.12
OD1225-24LB	1800	72	34	24	3	0.14	0.10

Knight Electronics, Inc.
10557 Metric Drive
Dallas, Texas 75243
214-340-0265

RoHS Compliant

Orion Fans
Information and data is subject to change without prior notification.

OD1232 Series

DC Fan - 12, 24, 48V
120x32mm (4.7"x 1.25")

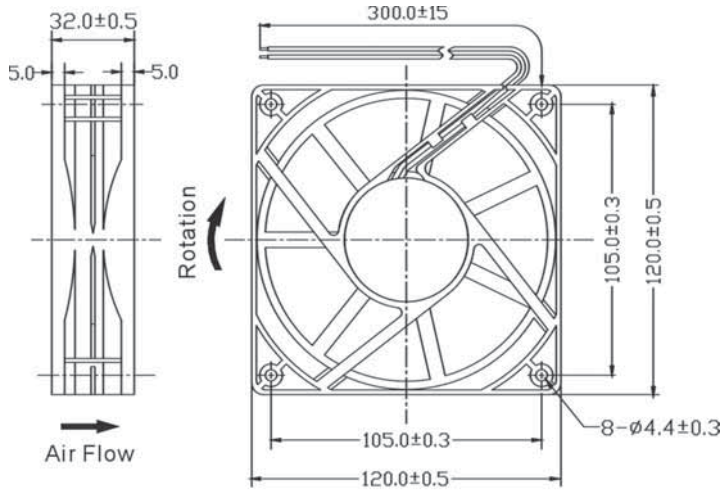

Frame & Impeller	PBT, UL94V-O plastic
Connection	2x Lead wires
Motor	Brushless DC, auto restart, impedance and polarity protected
Bearing System	Dual Ball or Sleeve
Insulation Resistance	10M ohm between leadwire and frame (500VDC)
Dielectric Strength	1 second at 500 VAC, max leakage - 500 MicroAmp
Storage Temperature	-30C ~ +90C

Available Options:
Tachometer (FG)
Alarm (RD)
Thermal Speed Control (Thermistor)
PWM Input (Manual Speed Control)

Life Expectancy (L10)
Ball Bearing
60,000 hours (L10 at 40C)
Sleeve Bearing
30,000 hours (L10 at 40C)

Operating Temperature
Ball Bearing
-20C ~ +80C
Sleeve Bearing
-10C ~ +50C

m4

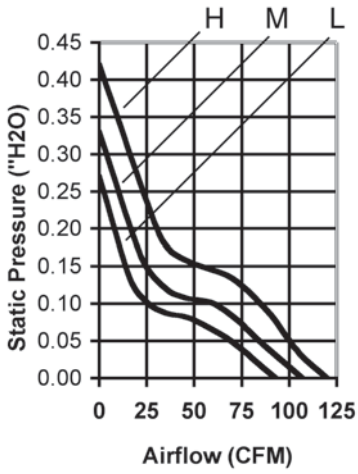

Model Number	Speed (RPM)	Airflow (CFM)	Noise (dB)	Volts DC	Voltage Range	Amps	Max. Static Pressure ("H2O)
OD1232-12H *	3750	120	51	12	6~13.8	0.60	0.42
OD1232-12M *	3300	107	48	12	6~13.8	0.50	0.33
OD1232-12L *	2900	93	44	12	6~13.8	0.32	0.27
OD1232-24H *	3750	120	51	24	12~27.8	0.45	0.42
OD1232-24M *	3300	107	48	24	12~27.8	0.28	0.33
OD1232-24L *	2900	93	44	24	12~27.8	0.22	0.27
OD1232-48H *	3750	120	51	48	24~55.2	0.18	0.42
OD1232-48M *	3300	107	48	48	24~55.2	0.15	0.33
OD1232-48L *	2900	93	44	48	24~55.2	0.13	0.27

* Indicate "B" to specify Ball bearing or "S" to specify Sleeve bearing

OD1238 Series

DC Fan - 12, 24, 48V
120x38mm (4.7"x 1.5")

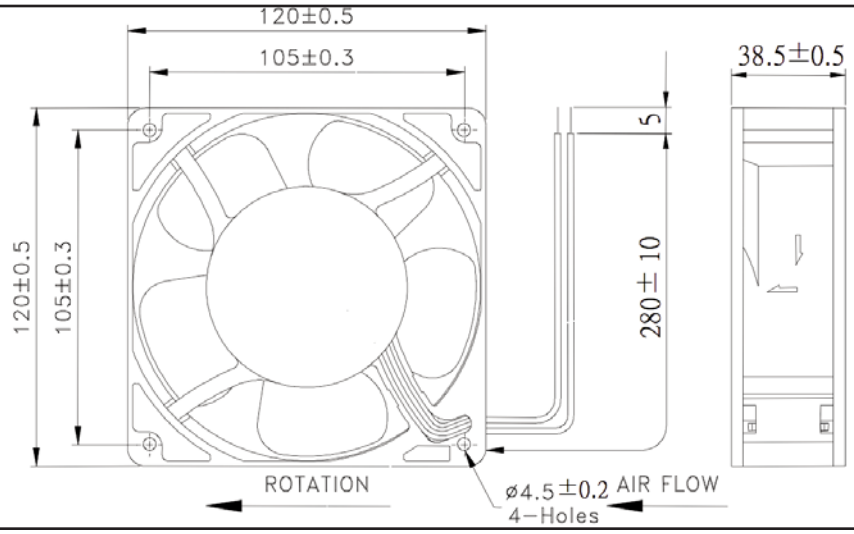

Frame & Impeller	PBT, UL94V-O plastic
Connection	2x Lead wires 22AWG
Motor	Brushless DC, auto restart, impedance and polarity protected
Bearing System	Dual ball bearing
Insulation Resistance	10M ohm between leadwire and frame (500VDC)
Dielectric Strength	1 second at 500 VAC, max leakage - 500 MicroAmp
Temperature Range	-20C ~ +75C *
Life (L10)	65,000 hours (45C)

"HH" units are modified for super high air performance. Frame design is designated as m4. Standard units are m0 type.

Aluminum frame is available. Use base part number "OD1238AP" to indicate metal frame. See website for full data sheet.

* 48V units temp range (-20 ~ +60C)

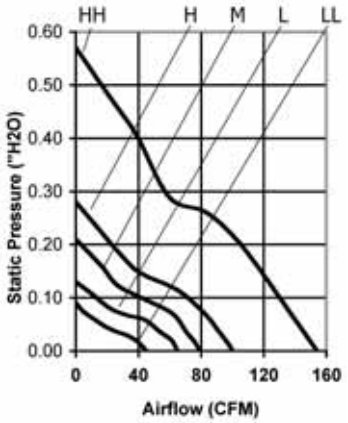

Model Number	Speed (RPM)	Airflow (CFM)	Noise (dB)	Volts DC	Voltage Range (VDC)	Amps	Max. Static Pressure ("H2O)
OD1238-12HHB	3800	154	52	12	6 ~ 13.2	1.30	0.57
OD1238-12HB	2800	105	43	12	6 ~ 13.2	0.50	0.24
OD1238-12MB	2540	95	41	12	6 ~ 13.2	0.35	0.23
OD1238-12LB	1950	73	33	12	6 ~ 13.2	0.24	0.13
OD1238-12LLB	1500	53	27	12	6 ~ 13.2	0.16	0.09
OD1238-24HHB	3800	154	52	24	12 ~ 26.4	0.60	0.57
OD1238-24HB	2800	105	43	24	12 ~ 26.4	0.32	0.24
OD1238-24MB	2540	95	41	24	12 ~ 26.4	0.23	0.23
OD1238-24LB	1950	73	33	24	12 ~ 26.4	0.14	0.13
OD1238-24LL * B	1600	45	23	24	18 ~ 27	0.15	0.09
OD1238-48HHB	3800	154	52	48	24 ~ 52	0.35	0.57
OD1238-48H * B	3000	100	42	48	28 ~ 54	0.10	0.28
OD1238-48M * B	2550	79	33	48	28 ~ 54	0.08	0.21
OD1238-48L * B	2000	65	26	48	28 ~ 54	0.07	0.13
OD1238-48LL * B	1600	45	23	48	28 ~ 54	0.07	0.09

* Insert letter "T" to specify terminal type. - (Sleeve Bearing - Replace suffix "B" with "S" in part number.)

Knight Electronics, Inc.
10557 Metric Drive
Dallas, Texas 75243
214-340-0265

RoHS Compliant

Orion Fans
Information and data is subject to change without prior notification.

OD1238 - 'XC Series'
High Performance

High Performance DC Fan
120x38mm (4.7"x 1.5")

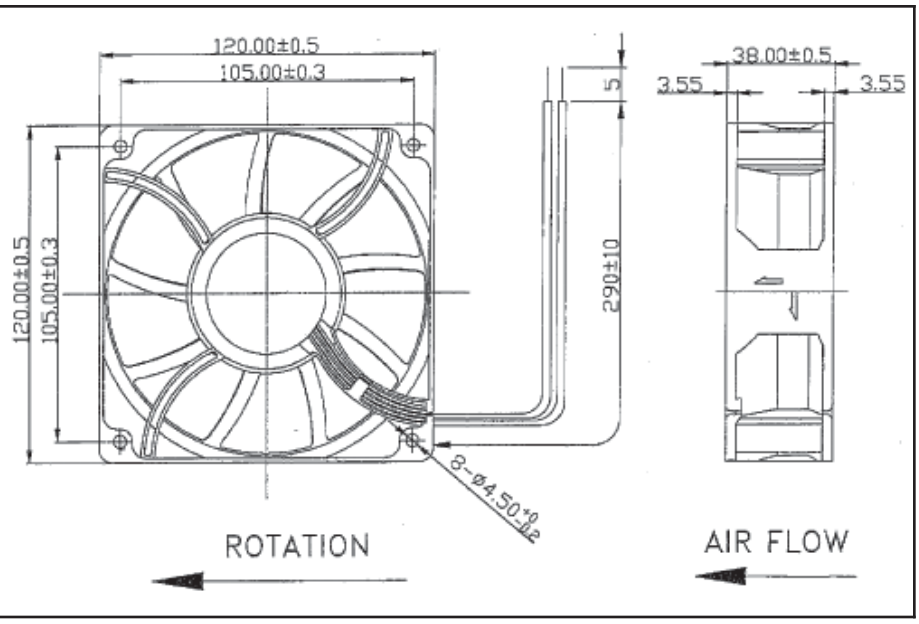

Frame & Impeller	PBT, UL94V-O plastic
Connection	2x Lead wires 24AWG
Motor	Brushless DC, auto restart, polarity protected
Bearing System	Dual ball bearing
Insulation Resistance	10M ohm between leadwire and frame (500VDC)
Dielectric Strength	1 second at 500 VAC, max leakage - 500 MicroAmp
Temperature Range	-10C ~ +70C
Life (L10)	65,000 hours (45C)

Available Options:

Tachometer (Frequency Generator)

Alarm (Rotation Detector)

Thermistor (Thermal Speed Control) Lead or hub mounted

m1

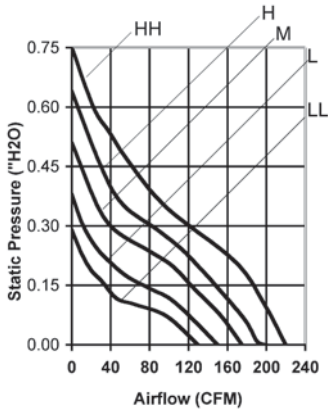

Model Number	Speed (RPM)	Airflow (CFM)	Noise (dB)	Volts DC	Input Power (Watts)	Amps	Max. Static Pressure ("H2O)
OD1238-12HB-XC	4300	200	61	12	23	1.95	0.64
OD1238-12MB-XC	3800	175	57	12	18	1.50	0.51
OD1238-12LB-XC	3200	150	52	12	10	0.87	0.38
OD1238-24HB-XC	4300	200	61	24	19	0.98	0.64
OD1238-24MB-XC	3800	175	57	24	16	0.68	0.51
OD1238-24LB-XC	3200	150	52	24	9	0.42	0.38
OD1238-24LLB-XC	2800	130	48	24	7	0.30	0.29
OD1238-48HHB-XC	4700	220	63	48	32	0.68	0.75
OD1238-48HB-XC	4300	200	61	48	25	0.52	0.64
OD1238-48MB-XC	3800	175	57	48	17	0.36	0.51
OD1238-48LB-XC	3200	150	52	48	11	0.22	0.38
OD1238-48LLB-XC	2800	130	48	48	9	0.18	0.29

Knight Electronics, Inc.
10557 Metric Drive
Dallas, Texas 75243
214-340-0265

RoHS Compliant

Orion Fans
Information and data is subject to change without prior notification.

OD1238 - 'VA Series'
Vane Axial High Pressure

High Performance DC Fan
120x38mm (4.7"x 1.5")

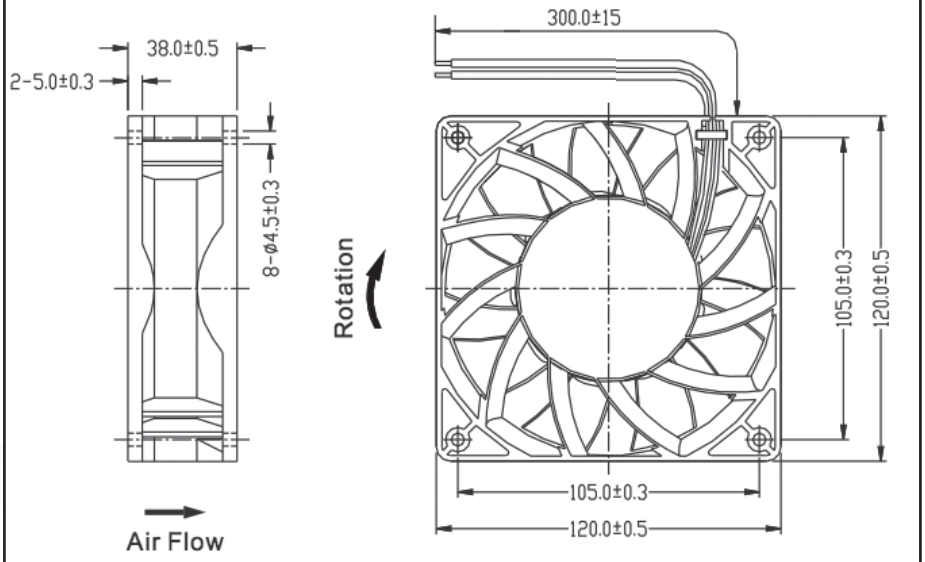

Frame & Impeller	PBT, UL94V-O plastic
Connection	2x Lead wires 22AWG
Motor	Brushless DC, auto restart, polarity protected
Bearing System	Dual ball bearing
Insulation Resistance	10M ohm between leadwire and frame (500VDC)
Dielectric Strength	1 second at 500 VAC, max leakage - 500 MicroAmp
Temperature Range	-10C ~ +70C
Life (L10)	65,000 hours (45C)

Available Options:

Tachometer (Frequency Generator)

Alarm (Rotation Detector)

Thermistor (Thermal Speed Control) Lead or hub mounted

m4

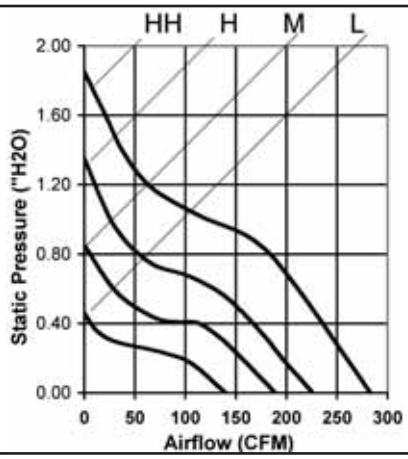

Model Number	Speed (RPM)	Airflow (CFM)	Noise (dB)	Volts DC	Voltage Range	Amps	Max. Static Pressure ("H2O)
OD1238-12HB-VXC	5000	226	65	12	6~14	3.6	1.35
OD1238-12MB-VXC	4000	189	59	12	6~14	2.0	0.85
OD1238-12LB-VXC	3000	140	52	12	6~14	1.5	0.46
OD1238-24HB-VXC	5000	226	65	24	12~28	1.7	1.35
OD1238-24MB-VXC	4000	189	59	24	12~28	1.1	0.85
OD1238-24LB-VXC	3000	140	52	24	12~28	0.6	0.46
OD1238-48HHB-VXC	6000	283	70	48	24~55	1.3	1.85
OD1238-48HB-VXC	5000	226	65	48	24~55	1.0	1.35
OD1238-48MB-VXC	4000	189	59	48	24~55	0.6	0.85
OD1238-48LB-VXC	3000	140	52	48	24~55	0.4	0.46

Knight Electronics, Inc.
10557 Metric Drive
Dallas, Texas 75243
214-340-0265

RoHS Compliant

Orion Fans
Information and data is subject to change without prior notification.

OD127AP Series
Aluminum Frame

DC Fan - 12, 24, 48V
127x38.5mm (5.0"x 1.5")

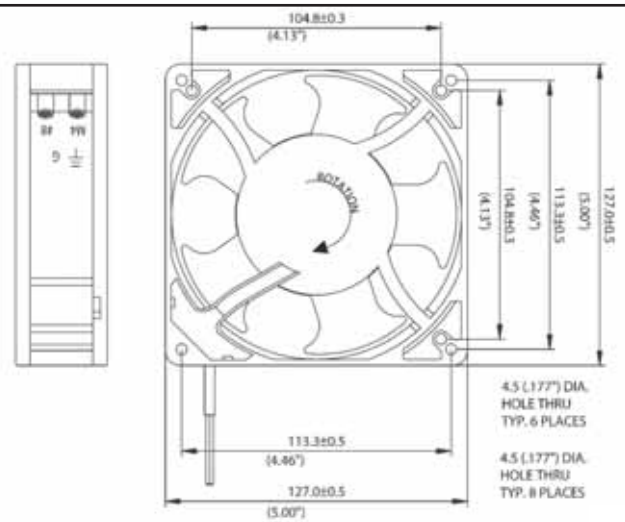

Frame	Diecast Aluminum
Impeller	PBT, UL94V-O plastic
Connection	2x Lead wires or terminals
Motor	Brushless DC, auto restart, polarity protected
Bearing System	Dual Ball bearing
Insulation Resistance	10M ohm between leadwire and frame (500VDC)
Dielectric Strength	1 second at 500 VAC, max leakage - 500 MicroAmp
Storage Temperature	-30C ~ +90C

Available Options:
Tachometer (FG)
Alarm (RD)

PWM Input (Manual Speed Control)
Sleeve bearing

Life Expectancy (L10)
Ball - 60,000 hrs (45C)

Operating Temperature
Ball: -20 ~ 75C

m0

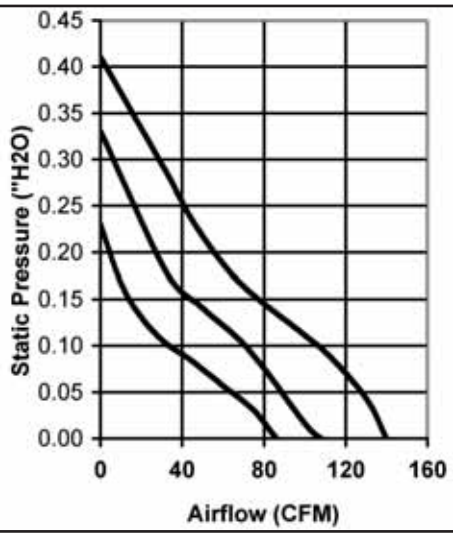

Model Number	Speed (RPM)	Airflow (CFM)	Noise (dB)	Volts DC	Voltage Range	Amps	Max. Static Pressure ("H2O)
OD127AP-12HB	3200	140	46	12	9~13.8	0.88	0.41
OD127AP-12MB	2600	108	38	12	9~13.8	0.50	0.33
OD127AP-12LB	1900	86	30	12	9~13.8	0.20	0.23
OD127AP-24HB	3000	140	46	24	12~27.6	0.43	0.41
OD127AP-24MB	2600	108	38	24	12~27.6	0.23	0.33
OD127AP-24LB	1900	86	30	24	12~27.6	0.15	0.23
OD127AP-48HB	3200	140	46	48	26~56	0.22	0.41
OD127AP-48MB	2600	108	38	48	26~58	0.10	0.33
OD127AP-48LB	1900	86	30	48	26~60	0.07	0.23

Knight Electronics, Inc.
10557 Metric Drive
Dallas, Texas 75243
214-340-0265

RoHS Compliant

Orion Fans
Information and data is subject to change without prior notification.

OD127 Series

DC Fan - 12, 24, 48V
127x38.5mm (5.0"x 1.5")

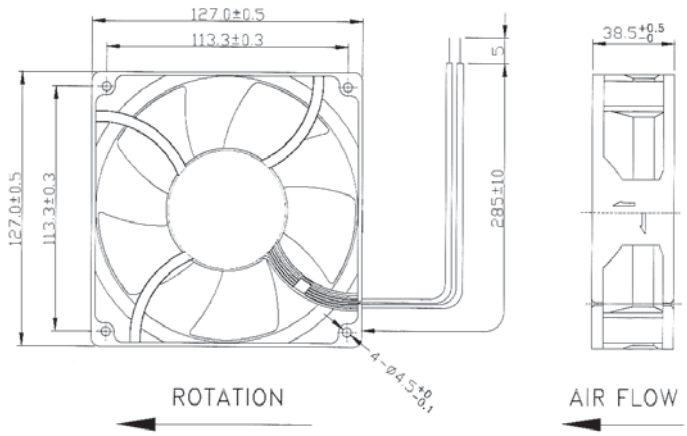

Frame & Impeller	PBT, UL94V-O plastic
Connection	2x Lead wires
Motor	Brushless DC, auto restart, polarity protected
Bearing System	Dual Ball bearing
Insulation Resistance	10M ohm between leadwire and frame (500VDC)
Dielectric Strength	1 second at 500 VAC, max leakage - 500 MicroAmp
Storage Temperature	-30C ~ +90C

Available Options:
Tachometer (FG)
Alarm (RD)
Thermal Speed Control (Thermistor)
PWM Input

Life Expectancy (L10)
Ball - 60,000 hrs (45C)

Operating Temperature
Ball: -20 ~ 75C

m1

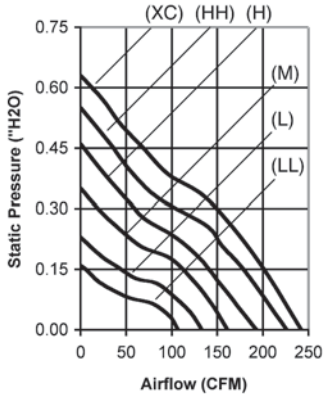

Model Number	Speed (RPM)	Airflow (CFM)	Noise (dB)	Volts DC	Voltage Range	Amps	Max. Static Pressure ("H2O)
OD127-12HHB	4100	226	62	12	8~14	2.3	0.55
OD127-12HB	3500	193	56	12	8~14	1.2	0.46
OD127-12MB	2950	161	53	12	8~14	0.78	0.35
OD127-24HB XC	4500	242	65	24	11~28	1.3	0.63
OD127-24HHB	4100	226	62	24	11~28	1.1	0.55
OD127-24HB	3500	193	56	24	11~28	0.61	0.46
OD127-24MB	2950	161	53	24	11~28	0.41	0.35
OD127-48HB XC	4500	242	65	48	22~55	0.70	0.63
OD127-48HHB	4100	226	62	48	22~55	0.55	0.55
OD127-48HB	3500	193	56	48	22~55	0.34	0.46
OD127-48MB	2950	161	53	48	22~55	0.23	0.35
OD127-48LB	2500	133	30	48	22~55	0.17	0.23
OD127-48LLB	2000	107	41	48	22~55	0.12	0.16

Knight Electronics, Inc.
10557 Metric Drive
Dallas, Texas 75243
214-340-0265

RoHS Compliant

Orion Fans
Information and data is subject to change without prior notification.

OD172SAPL Series

DC Fan - 12, 24, 48V
172x150x38mm (6.7"x 5.9"x 1.5")

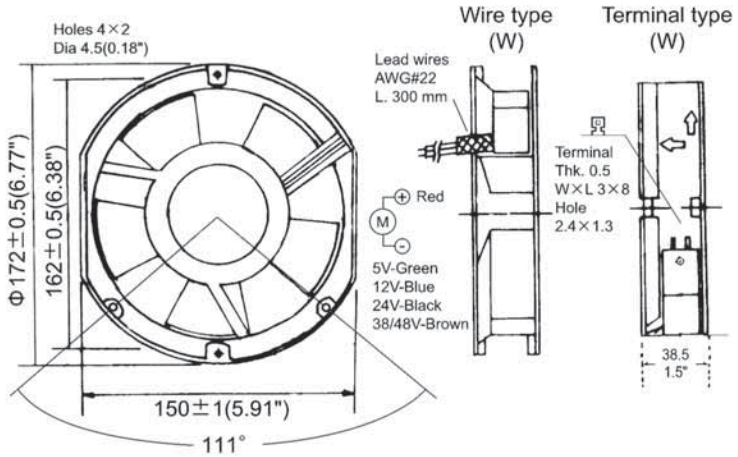

Frame	Diecast Aluminum
Impeller	PBT, UL94V-O plastic
Connection	2x Lead wires, AWG22 or terminals
Motor	Brushless DC, auto restart, polarity protected
Bearing System	Dual ball bearing
Insulation Resistance	10M ohm between leadwire and frame (500VDC)
Dielectric Strength	1 second at 500 VAC, max leakage - 500 MicroAmp
Storage Temperature	-30C ~ +90C

Available Options:
Tachometer (5VTTL)
Alarm (5VTTL)
Thermistor Speed Control
PWM Speed Control
Constant Speed

Life Expectancy (L10)
Ball - 60,000 hrs (45C)

Operating Temperature
Ball: -20C ~ 80C

m0

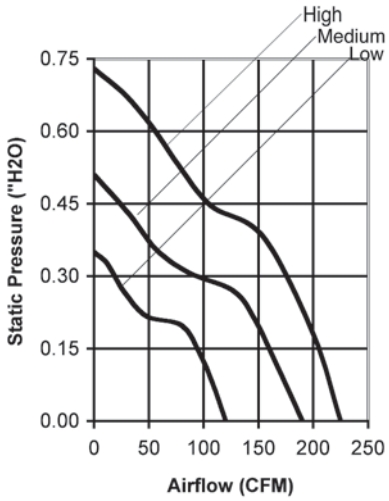

Model Number	Speed (RPM)	Airflow (CFM)	Noise (dB)	Volts DC	Voltage Range	Amps	Max. Static Pressure ("H2O)
OD172SAPL-12H *	4000	225	55	12	8~14	1.99	0.73
OD172SAPL-12M *	3300	190	45	12	8~14	1.10	0.51
OD172SAPL-12L *	2000	120	40	12	8~14	0.45	0.35
OD172SAPL-24H *	4000	225	55	24	15~28	0.97	0.73
OD172SAPL-24M *	2800	190	45	24	15~28	0.52	0.51
OD172SAPL-24L *	2000	120	40	24	15~28	0.20	0.35
OD172SAPL-48H *	4000	225	55	48	28~63	0.48	0.73
OD172SAPL-48M *	2800	190	45	48	28~63	0.30	0.51
OD172SAPL-48L *	2000	120	40	48	28~63	0.12	0.35

* Indicate "B" for wire leads or "TB" for Terminals

Knight Electronics, Inc.
10557 Metric Drive
Dallas, Texas 75243
214-340-0265

RoHS Compliant

Orion Fans
Information and data is subject to change without prior notification.

OD172S Series

DC Fan - 12, 24, 48V
172x150x51mm (6.7”x 5.9”x 2.0”)

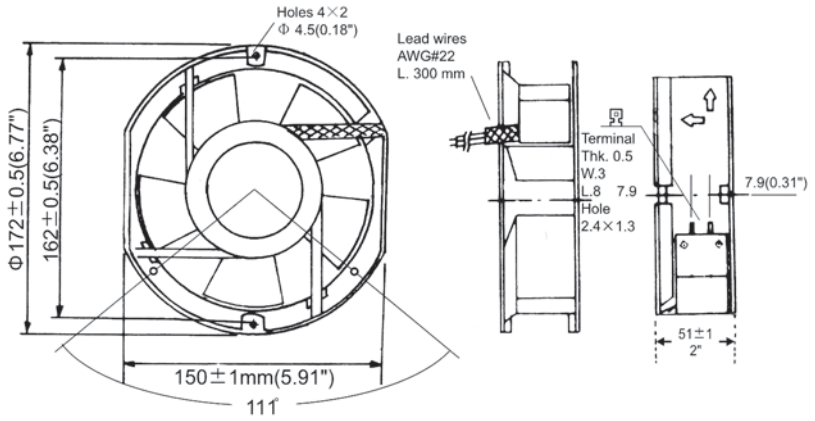

Frame	Diecast Aluminum
Impeller	PBT, UL94V-O plastic
Connection	2x Lead wires, AWG22 or terminals
Motor	Brushless DC, auto restart, polarity protected
Bearing System	Dual ball bearing
Insulation Resistance	10M ohm between leadwire and frame (500VDC)
Dielectric Strength	1 second at 500 VAC, max leakage - 500 MicroAmp
Storage Temperature	-30C ~ +90C

Available Options:
Tachometer (5VTTL)
Alarm (5VTTL)
Thermistor Speed Control
PWM Speed Control

Life Expectancy (L10)
Ball - 40,000 hrs (60C)

Operating Temperature
Ball: -20C ~ 75C

m0

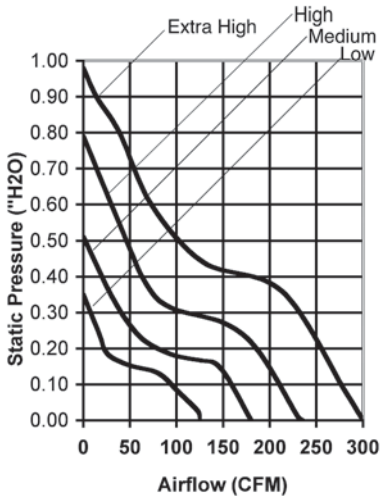

Model Number	Speed (RPM)	Airflow (CFM)	Noise (dB)	Volts DC	Voltage Range	Amps	Max. Static Pressure (“H2O)
OD172SAP-12HH *	3800	290	56	12	8~14	4.2	0.93
OD172SAP-12H *	3200	230	52	12	8~14	1.90	0.75
OD172SAP-12M *	2500	180	42	12	8~14	1.10	0.51
OD172SAP-12L *	1600	125	32	12	8~14	0.45	0.35
OD172SAP-24HH *	3900	300	57	24	15~28	2.65	0.98
OD172SAP-24H *	3300	235	52	24	15~28	0.97	0.79
OD172SAP-24M *	2500	180	42	24	15~28	0.52	0.51
OD172SAP-24L *	1600	125	32	24	15~28	0.20	0.35
OD172SAP-48HH *	3900	300	57	48	22~63	1.03	0.98
OD172SAP-48H *	3300	235	52	48	22~63	0.48	0.79
OD172SAP-48M *	2500	180	42	48	22~63	0.30	0.51
OD172SAP-48L *	1600	125	32	48	22~63	0.12	0.35

* Indicate “B” for wire leads or “TB” for Terminals

Knight Electronics, Inc.
10557 Metric Drive
Dallas, Texas 75243
214-340-0265

RoHS Compliant

Orion Fans
Information and data is subject to change without prior notification.

OD172S XC Series
High Performance

DC Fan - 12, 24, 48V
172x150x51mm (6.7”x 5.9”x 2.0”)

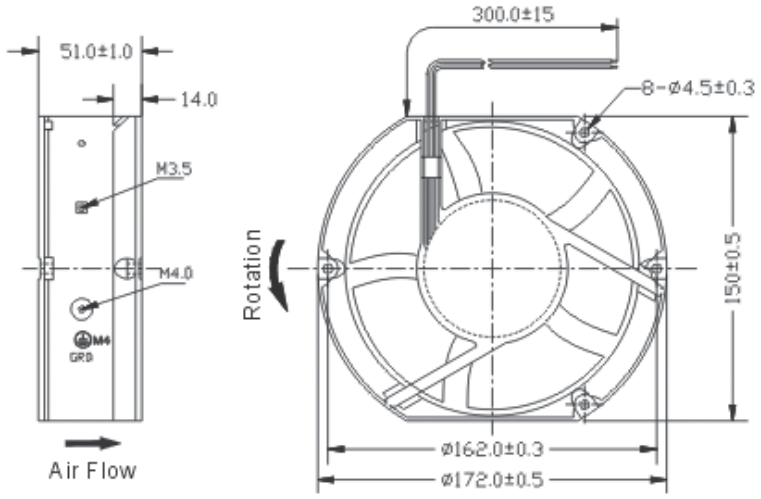

Frame	Diecast Aluminum
Impeller	PBT, UL94V-2 plastic
Connection	2x Lead wires, AWG22
Motor	Brushless DC, auto restart, impedance and polarity protected
Bearing System	Dual ball bearing
Insulation Resistance	10M ohm between leadwire and frame (500VDC)
Dielectric Strength	1 second at 500 VAC, max leakage - 500 MicroAmp
Temperature Range	-10C ~ +70C
Life (L10)	65,000 hours (45C) m4

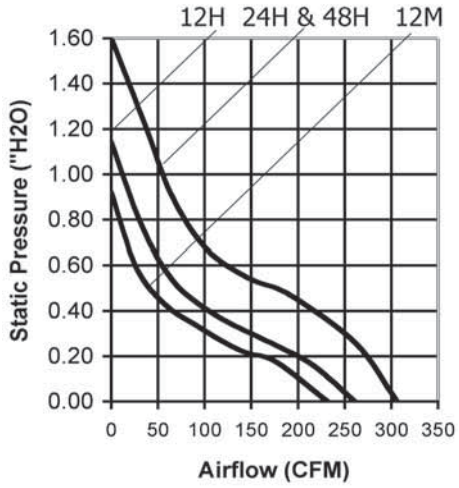

Model Number	Speed (RPM)	Airflow (CFM)	Noise (dB)	Volts DC	Voltage Range	Amps	Max. Static Pressure (“H2O)
OD172SAP-12HBXC	3900	277	62	12	9~14	3.50	1.14
OD172SAP-12MBXC	3400	232	59	12	9~14	2.40	0.92
OD172SAP-24HBXC	4600	307	67	24	15~28	2.30	1.60
OD172SAP-48HBXC	4600	307	67	48	24~55	1.20	1.60

Knight Electronics, Inc.
10557 Metric Drive
Dallas, Texas 75243
214-340-0265

RoHS Compliant

Orion Fans
Information and data is subject to change without prior notification.

OD180APL Series

DC Fan - 12, 24, 48V
180x65mm (7.1"x 2.6")

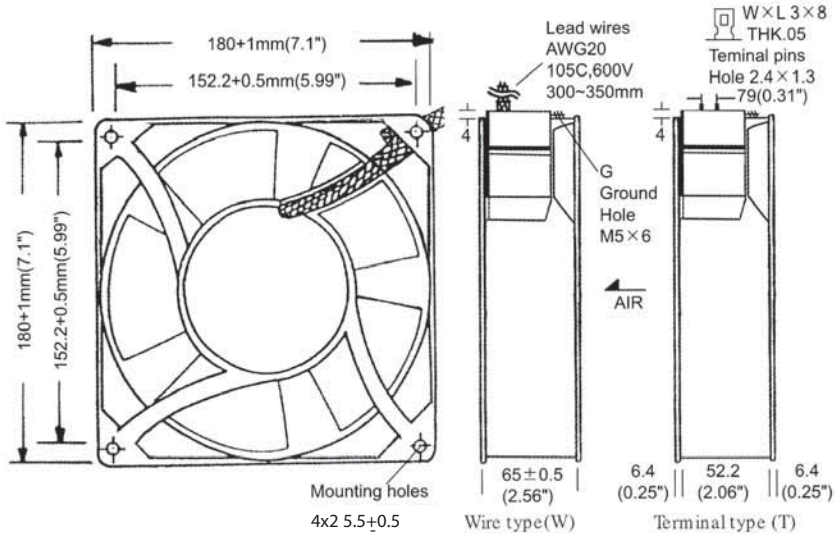

Frame & Impeller	Diecast Aluminum (Frame) PBT, UL94V-O - (Impeller)
Connection	2x Lead wires 20AWG or terminals
Motor	Brushless DC, auto restart, rotor lock & polarity protected
Bearing System	Dual ball bearing
Insulation Resistance	10M ohm between leadwire and frame (500VDC)
Dielectric Strength	1 second at 500 VAC, max leakage - 500 MicroAmp
Temperature Range	-25C ~ +80C
Life (L10)	60,000 hours (40C)

Available Options:

Alarm
Tachometer

Thermal Control

m0

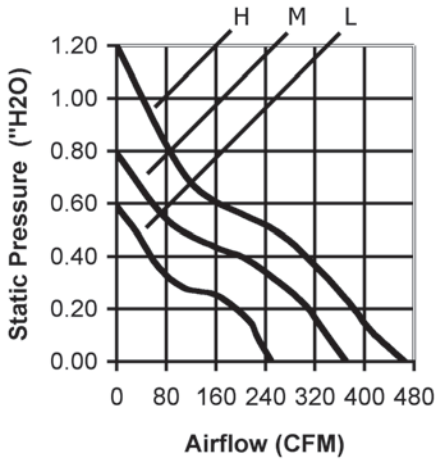

Model Number	Speed (RPM)	Airflow (CFM)	Noise (dB)	Volts DC	Input Power (Watts)	Amps	Max. Static Pressure ("H2O)
OD180APL-12H*B	2800	430	61	12	23	1.90	1.1
OD180APL-12M*B	2500	370	49	12	13	1.10	0.79
OD180APL-12L*B	1700	250	38	12	5.5	0.45	0.59
OD180APL-24H*B	3300	450	62	24	24	0.97	1.2
OD180APL-24M*B	2700	370	49	24	13	0.52	0.79
OD180APL-24L*B	1700	250	38	24	5	0.20	0.59
OD180APL-48H*B	3400	465	63	48	23	0.48	1.2
OD180APL-48M*B	2700	370	49	48	14	0.30	0.58
OD180APL-48L*B	2200	500	40	48	6	0.12	0.42

* Insert letter "T" to indicate terminal-type.

Knight Electronics, Inc.
10557 Metric Drive
Dallas, Texas 75243
214-340-0265

RoHS Compliant

Orion Fans
Information and data is subject to change without prior notification.

OD254 Series

DC Fan - 12, 24, 48V
254x89mm (10.0"x 3.50")

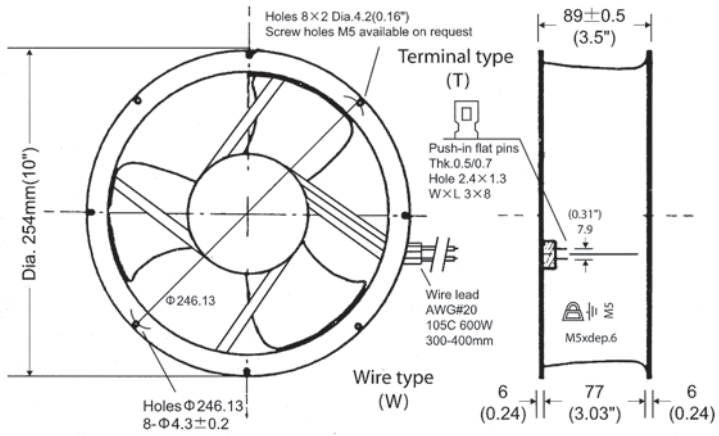

Frame	Diecast Aluminum
Impeller	PBT, UL94V-O plastic
Connection	2x Lead wires 20AWG or terminals
Motor	Brushless DC, auto restart, impedance and polarity protected
Bearing System	Ball bearing
Insulation Resistance	10M ohm between leadwire and frame (500VDC)
Dielectric Strength	1 second at 500 VAC, max leakage - 500 MicroAmp
Storage Temperature	-40C ~ +90C

Available Options:
Tachometer (5VTTL)
Alarm (5VTTL)
Thermistor Speed Control
PWM Speed Control

Life Expectancy (L10)
Ball - 40,000 hrs (60C)

Operating Temperature
Ball: -20C ~ 75C

m0

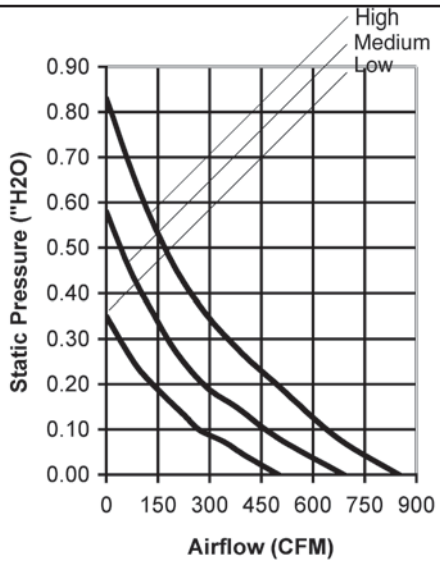

Model Number	Speed (RPM)	Airflow (CFM)	Noise (dB)	Volts DC	Voltage Range (VDC)	Input Power (Watt)	Amps	Max. Static Pressure ("H2O)
OD254AP-12H *	2400	830	60	12	9~13	65	5.4	0.78
OD254AP-12M *	2000	690	47	12	9~13	23	1.9	0.58
OD254AP-12L *	1650	550	39	12	8~14	13	1.1	0.37
OD254AP-24H *	2500	850	64	24	16~27	64	2.65	0.83
OD254AP-24M *	2000	690	47	24	16~27	24	0.97	0.58
OD254AP-24L *	1500	550	39	24	16~27	13	0.52	0.37
OD254AP-48H *	2500	850	64	48	24~53	62	1.3	0.83
OD254AP-48M *	2000	690	47	48	24~53	24	0.48	0.58
OD254AP-48L *	1500	550	39	48	24~56	15	0.30	0.37

* Indicate "B" for wire leads or "TB" for Terminals

Knight Electronics, Inc.
10557 Metric Drive
Dallas, Texas 75243
214-340-0265

RoHS Compliant

Orion Fans
Information and data is subject to change without prior notification.

Long Life
Low Cost

The Challenger series provides a unique patented sealed sleeve bearing system that has a life expectancy in excess of 50,000 hours. It is a very cost effective product for the cost conscious OEM

Size	120 x 38mm (4.7"x1.5")		120 X 25mm (4.7"x 1.0")		92 x 25mm (3.6"x1.0")		80 x 25mm (3.2" x 1.0")	
Part Number	OD1238-12HSS	OD1238-24MSS	OD1225-12HSS	OD1225-24HSS	OD9225-12HSS	OD9225-24HSS	OD8025-12HSS	OD8025-24HSS
Nominal Voltage	12VDC	24VDC	12VDC	24VDC	12VDC	24VDC	12VDC	24VDC
Nominal Current	0.50A	0.23A	0.44A	0.24A	0.25A	0.15A	0.25A	0.16A
Rated Power	4.7W	4.8W	5.3W	5.8W	2.9W	3.4W	2.9W	2.4W
Rated Speed (RPM)	2800	2540	2200	2200	2900	2900	3100	3100
Airflow (CFM)	105	96	85	85	52	52	40	40
Noise Level (dB)	47	47	39	39	35	35	34	34
Max. Static Pressure	0.27" H2O	0.23" H2O	0.14" H2O	0.14" H2O	0.13" H2O	0.13" H2O	0.16" H2O	0.16" H2O
Photo								

Size	60 x 25mm (2.4" x 1.0")		40 x 20mm (1.6" x 0.8")		40 x 10mm (1.6" x 0.4")	
Part Number	OD6025-12HSS	OD6025-24HSS	OD4020-12HSS	OD4020-24HSS	OD4010-12HSS	OD4010-24HSS
Nominal Voltage	12VDC	24VDC	12VDC	24VDC	12VDC	24VDC
Nominal Current	0.23A	0.15A	0.11A	0.09A	0.10A	0.09A
Rated Power	2.8W	3.6W	1.2W	1.7W	1.2W	1.4W
Rated Speed (RPM)	4600	4600	7800	7800	6000	6000
Airflow (CFM)	25	25	9.0	9.0	6.7	6.7
Noise Level (dB)	35	35	32	32	25	25
Max. Static Pressure	0.20" H2O	0.20" H2O	0.30" H2O	0.30" H2O	0.10" H2O	0.10" H2O
Photo						

Frame & Impeller	PBT, UL94V-2 plastic
Connection	2x Lead wires
Motor	Brushless DC, auto restart, polarity protected
Bearing System	Sealed Sleeve
Insulation Resistance	10M ohm between lead-wire and frame (500VDC)
Dielectric Strength	1500VAC / 1 min.
Operating Temperature	-10C ~ +70C

Knight Electronics, Inc.
10557 Metric Drive
Dallas, Texas 75243
214-340-0265

RoHS Compliant

Function

■ Frequency Generator

Generates a square wave out frequency equal to 2 periods per revolution for 4 poles fan and informs the user of the fan's running speed.

● Application 1 - Open Collector

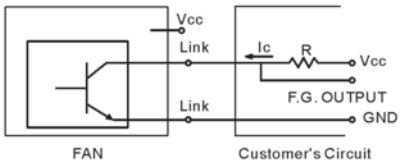

Vcc=From + 5 To +28 VDC Do not exceed fan supply voltage
Ic=5 mA max.
R=V/I(Output "R" value calculation)

● Application 2 - TTL Compatible

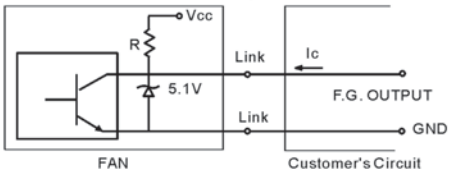

Ic= 5 mA max.

● Output Waveform

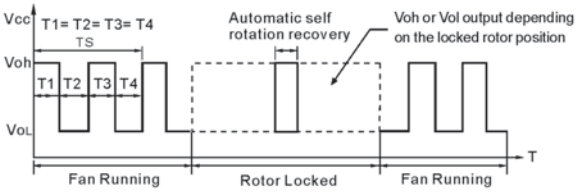

- ◆ N=R.P.M
- ◆ Ts=60/N(Sec)
- ◆ Output Level
  - Voh= Vcc ±10%
  - VoL=0~0.6V
  - Ic=5 mA max.

● Output Waveform

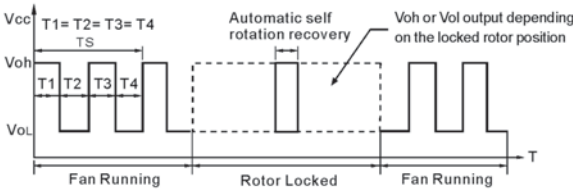

- ◆ N=R.P.M
- ◆ Ts=60/N(Sec)
- ◆ Output Level
  - Voh= 5.0V±0.5V
  - VoL=0~0.6V
  - Ic=5 mA max.

■ Rotation detector

Detects whether the fan is running or has stopped by generation a high or low output signal.

● Application 1

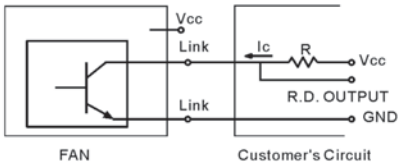

Vcc=From + 5 To +28 VDC (Generally using + 12 or + 24VDC)
Ic=2 mA max.
R=V/I(Output "R" value calculation)

● Application 2

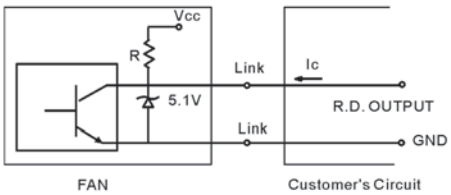

Vcc= From + 5 To +28 VDC (Generally using + 12 or + 24VDC)
Ic= 5 mA max.
R (type) = 10K

● Output Waveform

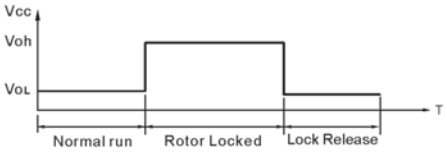

- ◆ Output Level
  - Voh=Vcc±10%
  - VoL=0~0.6V
  - Icc=5 mA max.

● Output Waveform

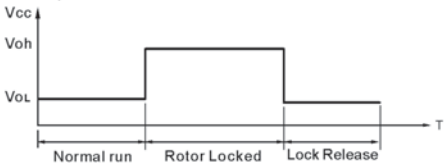

- ◆ Output Level
  - Voh=5.0V±0.5V
  - VoL=0~0.6V
  - Icc=5 mA max.

■ Temperature Control

Controls the fan speed via an thermistor which changes with the temperature of the task area where the thermistor is located.

● Application

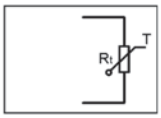

FAN

● **RPM Temperature curve**

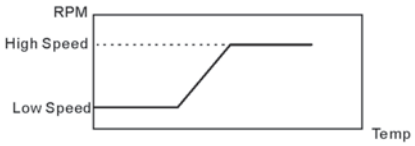

■ Pulse width modulation

Controls the fan speed automatically via an external input Pulse Width Modulation signal.

● Application

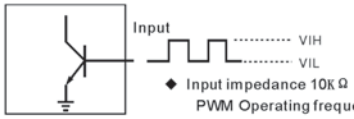

- ◆ Input impedance 10KΩ
  - PWM Operating frequency is 25±5KHz
  - VIH MIN=3.3VDC
  - VIL MAX=0.4VDC

● RPM & Duty Cycle Curve

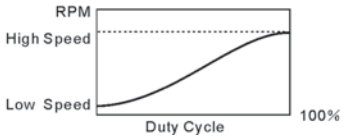

UL and cUL Listed

Thermalcare Fan Trays

Model Number	Part Number	Voltage	Fans	CFM
AC Fan Trays				
OA300S	FTA-03115-014(BK)	115VAC	3	330
OA600S	FTA-06115-014(BK)		6	660
OA300	FTA-03115-018(BK)		3	330
OA300-A	expansion module		3	330
OA600	FTA-06115-018(BK)		6	660
OA900	FTA-09115-018(BK)		9	990
OA302S	FTA-03220-014(BK)	230VAC	3	330
OA602S	FTA-06220-014(BK)		6	660
OA302	FTA-03220-018(BK)		3	330
OA302-A	expansion module		3	330
OA602	FTA-06220-018(BK)		6	660
OA902	FTA-09220-018(BK)		9	990
Dual Voltage AC Trays				
OA300S-DV	FTA-03DV-014(BK)	115/230VAC	3	330
OA600S-DV	FTA-06DV-014(BK)		6	660
OA300-DV	FTA-03DV-018(BK)		3	330
OA300DV-A	expansion module		3	330
OA600-DV	FTA-06DV-018(BK)		6	660
OA900-DV	FTA-09DV-018(BK)		9	990
DC Fan Trays				
OD300S-12	FTD-03012-014(BK)	12VDC	3	330
OD600S-12	FTD-06012-014(BK)		6	660
OD300-12	FTD-03012-018(BK)		3	330
OD300-12-A	expansion module		3	330
OD600-12	FTD-06012-018(BK)		6	660
OD900-12	FTD-09012-018(BK)		9	990
OD300S-24	FTD-03024-014(BK)	24VDC	3	330
OD600S-24	FTD-06024-014(BK)		6	660
OD300-24	FTD-03024-018(BK)		3	330
OD300-24-A	expansion module		3	330
OD600-24	FTD-06024-018(BK)		6	660
OD900-24	FTD-09024-018(BK)		9	990
OD300S-48	FTD-03048-014(BK)	48VDC	3	330
OD300-48-A	expansion module		3	330
OD600S-48	FTD-06048-014(BK)		6	660
OD300-48	FTD-03048-018(BK)		3	330
OD600-48	FTD-06048-018(BK)		6	660
OD900-48	FTD-09048-018(BK)		9	990

Fan trays are UL listed by the part number only. Model numbers are assigned as configuration descriptors only and do not affect UL certifications.

Basic Fan Tray Specifications...

Frame

Heavy Duty steel construction with extruded aluminum side rails. Black color standard, gray available by special order.

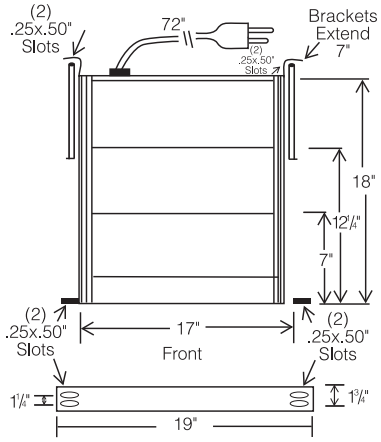

Hardware

EZ-mount clip nuts and fasteners

Configuration

Standard trays have 3, 6 or 9 fans installed. Our ADD-a-MODULE feature allows the user to easily increase or decrease the amount of cooling in 3-fan increments.

Options

Ultrashort 3-fan Tray available. Lighted on/off rocker switch. Dual voltage selector switch. Fan monitor and alarm. MEDIUM AND LOW SPEED FANS CAN BE SUBSTITUTED FOR LOW-NOISE APPLICATIONS. Ultra high speed fans are available.

We use only top quality, ball bearing ORION FANS in our fan tray assemblies. For DC applications plastic fans are standard however diecast aluminum fans can be substituted on request. (Minimums apply.)

We can customize our fan trays to perform virtually any function required. If you need something which does not appear in this catalog just let us know. Our sales engineers will be happy to discuss your needs and provide a solution.

Knight Electronics, Inc.
10557 Metric Drive
Dallas, Texas 75243
214-340-0265

RoHS Compliant

Orion Fans
Information and data is subject to change without prior notification.

Power Connection

AC trays have standard 115 or 230 VAC power cords. DC trays come with standard DC screw terminals.

115VAC

230VAC

DC Power

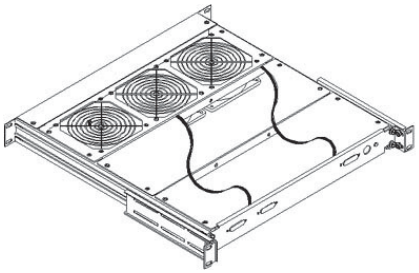

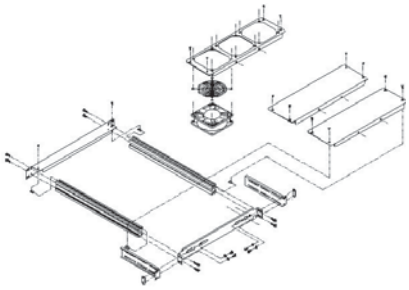

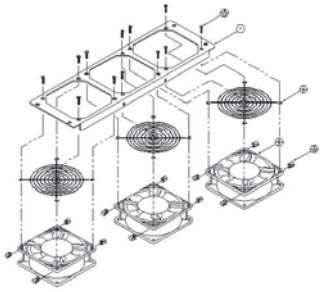

Standard trays are populated with high speed, ball bearing fans. We can substitute virtually any 120mm AC or DC fan for your special project. Just let your sales engineer know what your requirements are and he or she will be happy to provide a solution.

Custom Trays

ORION FANS fan trays are available in dozens of stock configurations. If you cannot find what you are looking for give us a call. We can design and build your trays from scratch or we can help you come up with solutions for your toughest problems.

Dual Voltage Selector

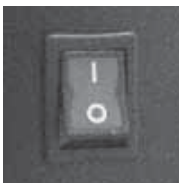

Lighted on/off rocker

Warning Lights

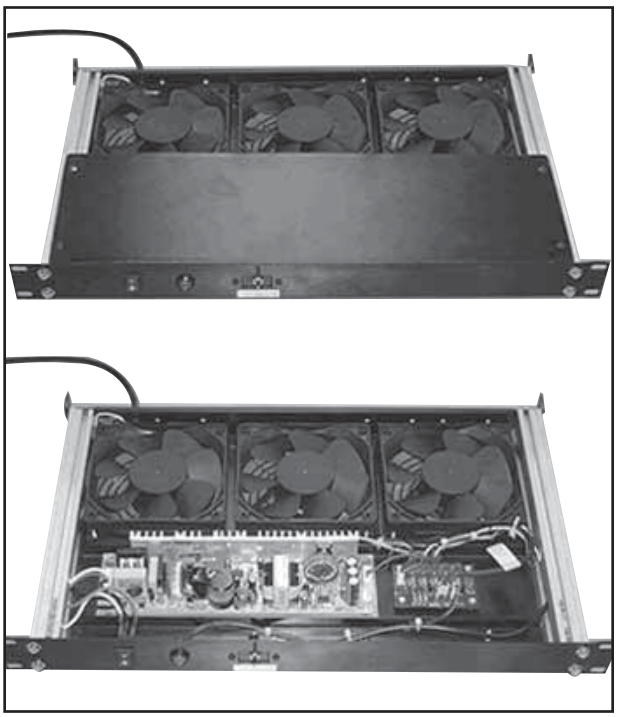

Orion Standard Tray

L=19″ W=19″ D=1.75″ with IEC320, C14-type connector on back. 115/230 voltage selector included with dual voltage tray.

Orion Short Tray

L=14″ W=19″ D=1.75″. Optional lighted on/off rocker with IEC320, C14-type connector on back. 115/230 voltage selector included with dual voltage tray.

Expansion Module

Maximum flexibility - minimum effort. Add or subtract fan modules quickly and easily as your cooling needs change.

OMB5200 Series
432x348x132.6
(17”x 13.7”x 5.22”)

OA300ST Series
432x203x44.5mm
(17”x 8”x 1.75”)

FRONT

BACK

Unit slides in to any standard 19” rack.

Tray features 2 high performance sealed ball bearing fans.

Power cord configured for standard 115 VAC or 230 VAC connection

FRONT

BACK

Lighted rocker switch

Resettable circuit breaker.

Unit slides in to any standard 19” rack.

Tray features 3 high performance sealed ball bearing fans.

Black electro deposit finish for long life

Part Number	OMB5200-120	OMB5200-230	OA300ST-120	OA300ST-230
No. of Fans	2	2	3	3
Bearing System	Dual Ball Bearing	Dual Ball Bearing	Dual Ball Bearing	Dual Ball Bearing
Nominal Voltage (60Hz)	115 VAC	230 VAC	115 VAC	230 VAC
Input Power	70 Watts	70 Watts	45 Watts	45 Watts
Rated Speed (RPM)	3500	3500	3000	3000
Airflow (CFM)	340	340	310	310
Noise Level (dB)	57	57	53	53
Life Expectancy	60,000 hrs (25C)	60,000 hrs (25C)	60,000 hrs (25C)	60,000 hrs (25C)
Connection	1.8M Power Cord	1.8M Power Cord	2M Modular Power Cord	2M Modular Power Cord

Spot Cooler

Extend the Life
of Your Equipment

Complete Kit	**OD1232-SPOT / DIN** Part Number - 124141794 Includes: 120x32mm Fan * DIN rail DIN mount fan bracket Mounting screws 2 fan guards Power adaptor with 6' cord Automotive grade, double-sided, mount anywhere tape
Spot Cooler Only	**OD1232-SPOT** Part Number - 124141794 Includes: 120x32mm Fan * 1 fan guard Power adaptor with 6' cord
Fan ID	OD1232-12HB-03 *
VOLTAGE INPUT	120VAC / 60Hz
INPUT POWER	19 Watts
DC Nominal Current	0.60 A
DC Locked Current	0.05 A
Rated Speed (RPM)	1600 Max. (40C)
Airflow	65CFM @ 25C / 120CFM @ 40C
Noise Level (dB)	20 ~ 47
Max. Static Pressure	0.43" H_2O
Bearing System	Dual Ball
Frame & Impeller	PBT, UL94V-O plastic
Motor	Brushless DC, auto restart, polarity protected. Thermal Control.
Bearing System	Dual ball bearing
Insulation Resistance	10M ohm between leadwire and frame (500VDC)
Dielectric Strength	5mA max at 1500VAC for 1 minute between the leadwire and frame
Operation Temperature	-10C ~ +70C
Life (L10)	60,000 hours

Patent Pending

Thermal Speed Control
Airflow Range

65 CFM at 25C
120 CFM at 40C

Energy Saving Solution for your Green Initiative

Clips to standard DIN rail

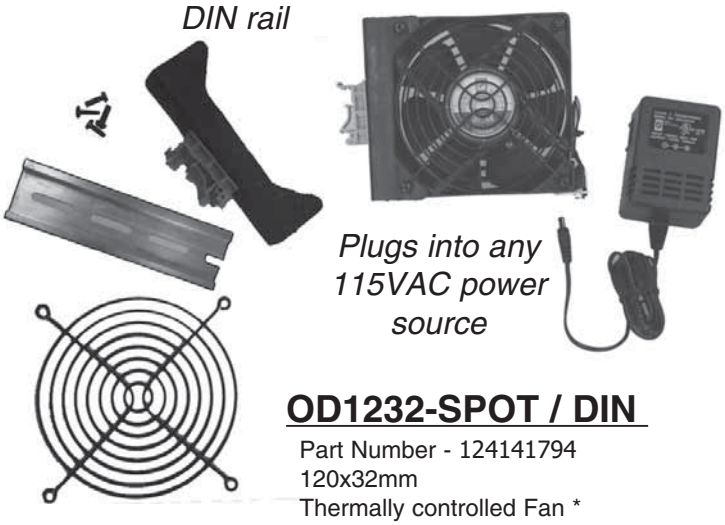

Plugs into any 115VAC power source

OD1232-SPOT / DIN

Part Number - 124141794
120x32mm
Thermally controlled Fan *
6' Cord with adaptor
2 guards (1 installed)
DIN rail
DIN mount fan bracket
Mounting screws
Automotive grade, double-sided, mount anywhere tape

OD1232-SPOT

Part Number - 124141794
120x32mm
Thermally controlled Fan *
6' Cord with adaptor
1 guard installed

OD9225-SPOT - Instant smart cooling for small spaces is also available in a smaller package

Part Number - 193141791
92x25mm thermally controlled fan.
[50CFM (3100RPM) at 34C to
< 30CFM (1600RPM) at 22C]
6' cord with adaptor
1 guard installed

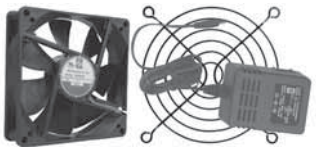

Knight Electronics, Inc.
10557 Metric Drive
Dallas, Texas 75243
214-340-0265

RoHS Compliant

Orion Fans
Information and data is subject to change without prior notification.

AC Blowers

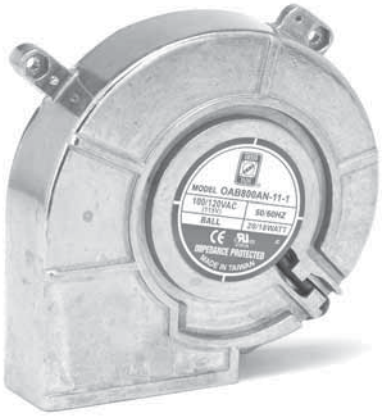

OAB800AN

Frame
Diecast Aluminum

Impeller
Glass reinforced PBT, UL94V-0

Power Connection
Two lead wires 300mm (12")

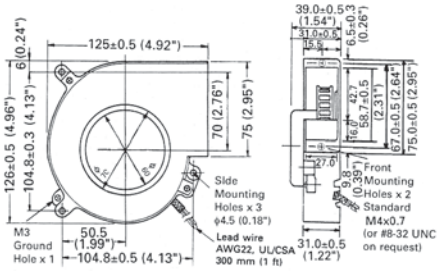

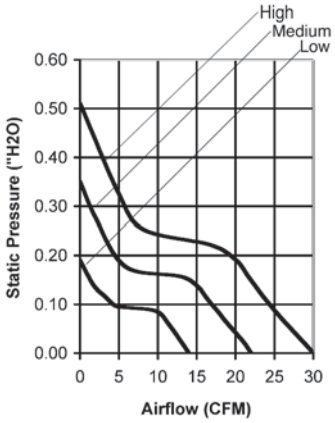

Model Number	Speed (RPM)	Airflow (CFM)	Noise (dB)	Volts AC	Voltage Range	Watts	Max. Static Pressure ("H_2O)
OAB800AN-11-1B	2800	30	48	115	80~120	18	0.51
OAB800AN-11-2B	2100	22	39	115	80~120	12	0.35
OAB800AN-11-3B	1400	14	28	115	80~120	9	0.19
OAB800AN-22-1B	2800	30	48	220	150~240	18	0.51
OAB800AN-22-2B	2100	22	39	220	150~240	12	0.35
OAB800AN-22-3B	1400	14	28	220	150~240	9	0.19

OAB908 Series Side-inlet blower - Dual Speed
183x190x70mm (7.2"x 7.5"x 2.8")

Frame
Diecast Aluminum

Impeller
PBT, UL94V-0 Thermoplastic

Power Connection
3x lead wires 300mm (12").

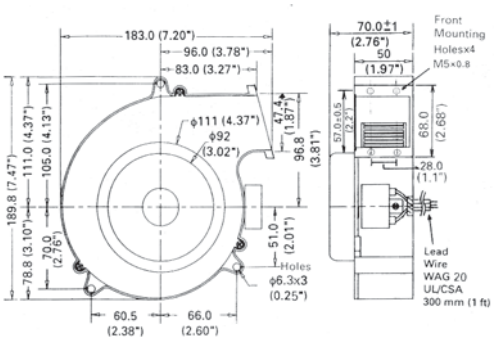

Part Number	OAB908AN-11-1/2	OAB908AN-22-1/2
Nominal Voltage	120VAC	220VAC
Voltage Range	100~125VAC	200~240VAC
Input power (Watts)	65 W / 45 W	65 W / 45 W
Rated Speed (RPM)	3100 / 2400	3100 / 2400
Airflow (CFM)	100 / 75	100 / 75
Noise Level (dB)	68 / 55	68 / 55
Max. Static Pressure (ìH2O)	0.9 / 0.7	0.9 / 0.7
Bearing System	Sealed Dual Ball	Sealed Dual Ball

Motor
High performance capacitor drive, Thermally Protected

Dielectric Strength
1500VAC / 1 min., 0.5mA

Operating Temperature
-30C ~ +85C

Life Expectancy (L10)
60,000 hours

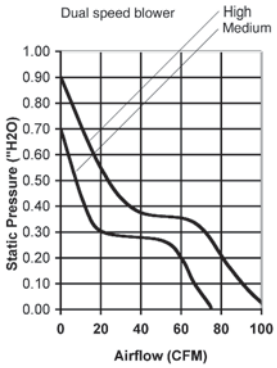

DC Blowers

Motor
Brushless DC, polarity protected, locked rotor protected (current limited), auto restart

Insulation Resistance
Min. 10M at 500VDC

Dielectric Strength
1 minute at 500VAC / 1 second, max leakage 500 microamp

Operating Temperature
-10C ~ +70C

Life Expectancy
60,000 hours

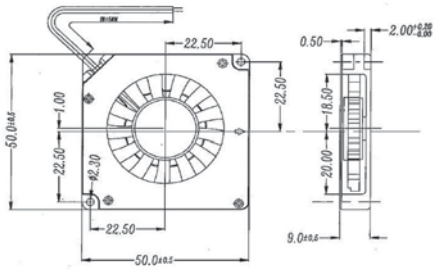

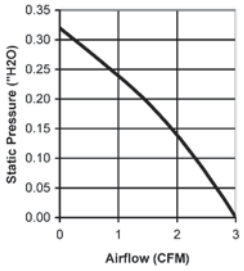

Model Number	Speed (RPM)	Airflow (CFM)	Noise (dB)	Volts DC	Voltage Range	Amps	Max. Static Pressure (ìH$_2$O)
ODB5009-12HB	5000	3	34	12	6~14	0.11	0.32
ODB5009-24HB	5000	3	34	24	12~27	0.09	0.32

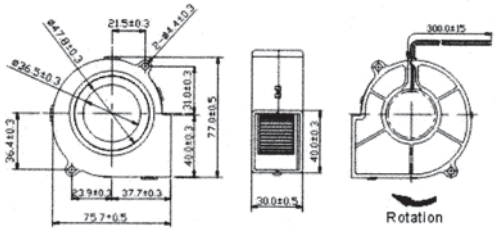

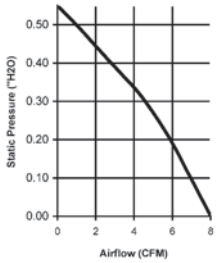

Model Number	Speed (RPM)	Airflow (CFM)	Noise (dB)	Volts DC	Voltage Range	Amps	Max. Static Pressure (ìH$_2$O)
ODB7530-12HB	2600	8	35	12	6~14	0.30	0.55
ODB7530-24HB	2600	8	35	24	12~27	0.12	0.55

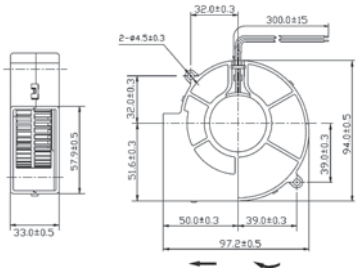

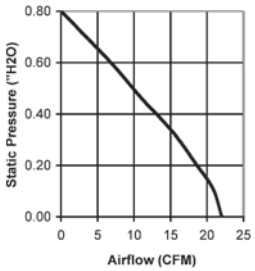

Model Number	Speed (RPM)	Airflow (CFM)	Noise (dB)	Volts DC	Voltage Range	Amps	Max. Static Pressure (ìH$_2$O)
ODB9733-12HB	3300	22	50	12	6~14	0.80	0.82
ODB9733-24HB	3300	22	50	24	12~27	0.55	0.82
ODB9733-48HB	3300	22	50	48	24~55	0.30	0.82

DC Blowers

12, 24, 48V
120x32mm (4.7" x 1.25")

ODB600PT

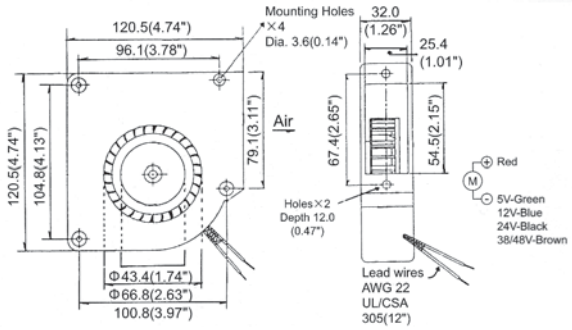

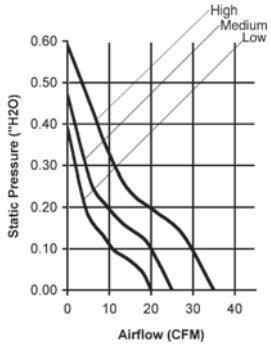

Model Number	Speed (RPM)	Airflow (CFM)	Noise (dB)	Volts DC	Voltage Range	Amps	Max. Static Pressure ("H_2O)
ODB600PT-12HB	3000	35	49	12	8~14	0.60	0.59
ODB600PT-12MB	2500	25	42	12	8~14	0.47	0.47
ODB600PT-12LB	1800	20	30	12	8~14	0.20	0.39
ODB600PT-24HB	3000	35	49	24	10~29	0.37	0.59
ODB600PT-24MB	2500	25	42	24	10~29	0.30	0.47
ODB600PT-24LB	1800	20	30	24	10~29	0.20	0.39

ODB1232

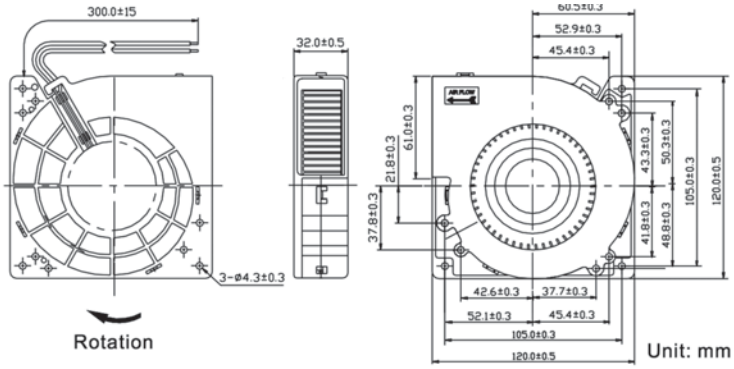

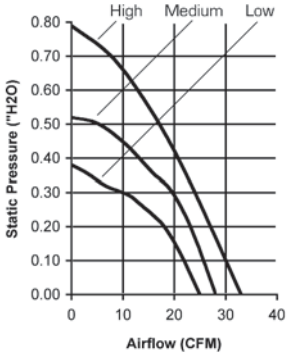

Model Number	Speed (RPM)	Airflow (CFM)	Noise (dB)	Volts DC	Voltage Range	Amps	Max. Static Pressure ("H2O)
ODB1232-12HB	2600	33	55	12	6~14	0.79	0.92
ODB1232-12MB	2300	28	49	12	6~14	0.53	0.83
ODB1232-12LB	2100	25	48	12	6~14	0.41	0.66
ODB1232-24HB	2600	33	55	24	12~28	0.43	0.92
ODB1232-24MB	2300	28	49	24	12~28	0.36	0.83
ODB1232-24LB	2100	25	48	24	12~28	0.25	0.66
ODB1232-48HB	2600	33	55	48	24~55	0.22	0.92
ODB1232-48MB	2300	28	49	48	24~55	0.18	0.83
ODB1232-48LB	2100	25	48	48	24~55	0.16	0.66

Frame & Impeller
PBT, UL94V-0 Thermoplastic

Power Connection
Two lead wires 300mm (12")

Life Expectancy (L10)
Ball Bearing 60,000 hrs
Sleeve Bearing 30,000 hrs

Motor
Brushless DC, polarity protected, locked rotor protected (current limited), auto restart

Insulation Resistance
Min. 10M at 500VDC

Dielectric Strength
1 minute at 500VAC / 1 second, max leakage 500 microamp

Operating Temperature
Ball Bearing
-20C ~ +70C
Sleeve Bearing
-10C ~ +50C

Knight Electronics, Inc.
10557 Metric Drive
Dallas, Texas 75243
214-340-0265

RoHS Compliant

Orion Fans
Information and data is subject to change without prior notification.

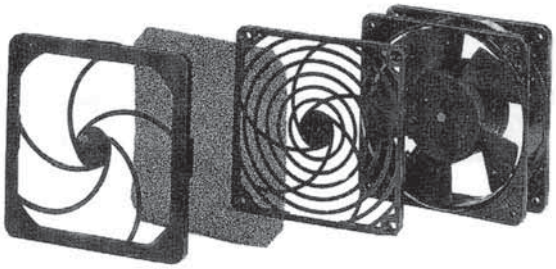

Retainer Media Guard

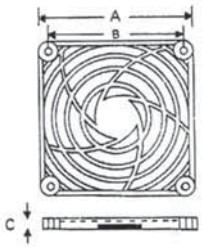

Media
PU foam, 30 or 45ppi

Retainer and Guard
ABS UL94V-0

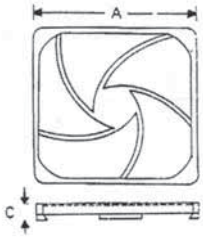

FILTER KITS...

Each filter kit is comprised of:
Guard which attaches to the fan,
Retainer which snaps into the guard
Media in either 30ppi (pores per inch) or 45ppi.

Tools not required to clean media.

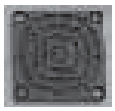

Size (A)	Part Number	Mtg Centers (B)	Retainer P/N (C - thickness)	Guard P/N (C - thickness)	Media
40mm (1.57″)	GRM40-30 GRM40-45	32mm (1.26″)	R40P (3.2mm)	G40P (6.3mm)	M40-30, M40-45
60mm (2.36″)	GRM60-30 GRM60-45	50mm (1.97″)	R60P (3.2mm)	G60P (6.5mm)	M60-30, M60-45
80mm (3.15″)	GRM80-30 GRM80-45	71.5mm (2.81″)	R80P (9.8mm)	G80P (6.5mm)	M80-30, M80-45
92mm (3.62″)	GRM92-30 GRM92-45	82.5mm (3.25″)	R92P (9.9mm)	G92P (6.4mm)	M92-30, M92-45
120mm (4.7″)	GRM120-30 GRM120-45	104.8mm (4.13″)	R120P (10.8mm)	G120P (7.2mm)	M120-30, M120-45
172mm (6.7″)	GRM172-45	162mm (6.38″)	R172P (11.8mm)	G172P (8mm)	M172-45

WIRE MESH GUARDS

Corrugated Aluminum filters offer high levels of air passage while efficiently filtering contaminents and acting as a EMI/RFI shield. The tightly woven, stainless, corrugated mesh screens offer high performance at low cost. Filters may be mounted directly onto the fan or to any other housing. Anodized black (suffix "B") or natural mill finish (suffix "M")

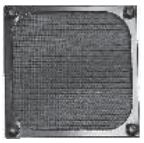

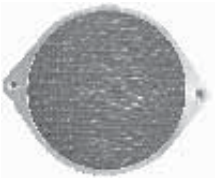

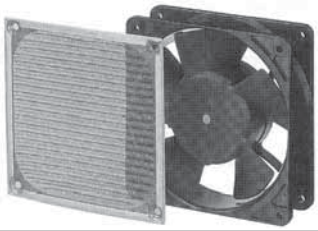

Size	Part Number	Mounting Centers	Thickness	Mounting Hole dia.
60mm (2.36″)	WMG60M WMG60B	50mm (1.97″)	4.5mm (0.17″)	4.3mm (0.17″)
80mm (3.15″)	WMG80M WMG80B	71.5mm (2.81″)	4.5mm (0.17″)	4.3mm (0.17″)
92mm (3.62″)	WMG92M WMG92B	82.5mm (3.25″)	4.5mm (0.17″)	4.3mm (0.17″)
120mm (4.7″)	WMG120M WMG120B	104.8mm (4.13″)	4.5mm (0.17″)	4.3mm (0.17″)
172mm (6.7″)	WMG172M WMG172B	162mm (6.38″)	4.3mm (0.17″)	4.3mm (0.17″)

FINGER GUARDS - METAL

Steel wire electroplated in nickel chrome. Black finish available.
Welded joints withstand 220 lbs. separation force to meet UL/cUL standards.
Please add the suffix "B" to the part number to indicate black finish.

	Size	Part No	Mtg Ctr	Dia.	Thickness
	25mm (1.0")	G25-2	20mm (0.79")	24mm (0.94")	4mm (0.16")
	40mm (1.57")	G40-2	31.5mm (1.65")	32mm (1.26")	4mm (0.16")
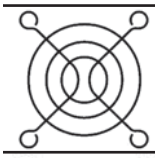	52mm (2.0")	G50-3	42mm (1.65")	41.1mm (1.62")	4.8mm (0.19")
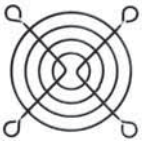	60mm (2.36")	G60-4	50mm (1.97")	53mm (2.09")	4.6mm (0.18")
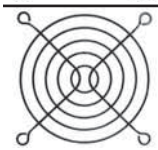	80mm (3.15")	G80-18 G80-18B	71.5mm (2.81")	76.2mm (3.02")	5.5mm (0.22")
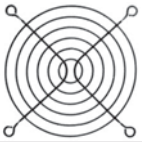	92mm (3.62")	G92-16 G92-16B	82.5mm (3.25")	89.4mm (3.52")	5.5mm (0.22")
	120mm (4.7")	G109-3A	104.8mm (4.13")	109mm (4.31")	4.8mm (0.19")
	120mm (4.7")	G109-15A G109-15AB	104.8mm (4.13")	115.6mm (4.55")	5.5mm (0.22")

(Mounting hole diameter: 4.6mm except 172mm guards which are 5mm)

	Size	Part No	Mtg Ctr	Dia.	Thickness
	127mm (5.0")	G119-8	113.3mm (4.46")	115mm (4.53")	5.5mm (0.22")
	172mm (6.7")	G172-10H G172-10HB	162mm (6.38")	156mm (6.14")	6.5mm (0.26")
	172mm (6.7")	G172-10HA G172-10HAB	162mm (6.38")	154mm (6.08")	6.5mm (0.26")
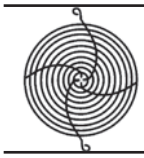	172mm (6.7")	G172-10LN	162mm (6.38")	143mm (5.63")	6.4mm (0.25")
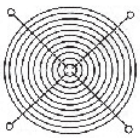	180mm (7.06")	G180-11	153mm (6.0")	190.5mm (7.5")	5.5mm (0.21")
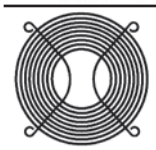	254mm (10.0")	G254-10P	174mm (6.85")	222.3mm (8.75")	6.4mm (0.25")
	225mm (8.86")	G225	169.7mm (6.68")	215mm (8.45")	8.7mm (.34")
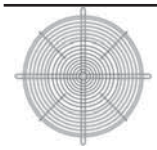	280mm (11.0")	G280	208.6mm (8.21")	269.7mm (10.6")	7.2mm (.28")

FINGER GUARDS - PLASTIC

PBT, UL94V-0 Thermoplastic.

6.3mm (0.25") ring spacing. Aerodynamic design helps to reduce fan noise

Size	Part Number
40mm (1.57")	G40P
60mm (2.36")	G60P
80mm (3.15")	G80P
92mm (3.62")	G92P
120mm (4.7")	G120P
172mm (6.7")	G172P

Fan Cords

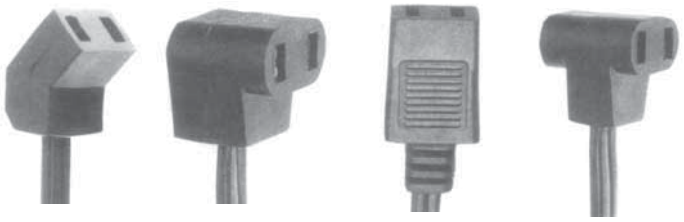

C45 C90 C180 C180T

SPT-1, 2x 18AWG, 105C

Example: 3-head daisy chain with a 72 inch lead and an AC plug.

Head Style	Number of Heads	Lead Length	Termination
C45 -	3DC -	72	P
C45 = 45 deg. C90 = 90 deg. C180 = straight C180T = "T" shaped	*blank = 1 2DC = 2 3DC = 3 4DC = 4 6DC = 6 9DC = 9*	*Lead length in inches. 12" increment is standard for stock product.*	*blank = blunt cut ST = Stripped and Tinned P = NEMA 1-15 AC plug added EURO = European plug*

DAISY CHAINS...

permit multiple connections of fans to a single power source. Product is available from stock in 2, 3, 4, 6 and 9 head configurations with lead lengths ranging from 12"-12'. Each head is separated by 12" of cord'. Standard product is blunt cut, but cords are usually available with AC plugs on request for an additional charge.

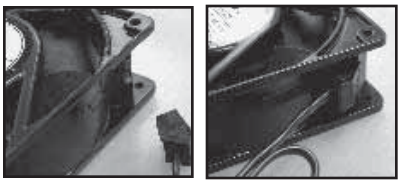

FANS WITH TERMINALS MAKE CONNECTING AND DISCONNECTING POWER A BREEZE.

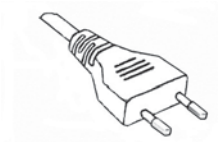

European plug

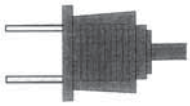

NEMA 1-15 AC plug

Stocked Cords

Part Number	Features
12 inch Lead	
C45-12	*Standard cord, blunt cut, one head*
C90-12	
C180-12	
C180T-12	
24 inch Lead	
C45-24	*Standard cord, blunt cut, one head*
C45-24P	*AC plug added*
C45-2DC-24	*2-head daisy chain*
C45-3DC-24	*3-head daisy chain*
C45-4DC-24	*4-head daisy chain*
C45-6DC-24	*6-head daisy chain*
C45-9DC-24	*9-head daisy chain*
C90-24	*Standard cord, blunt cut, one head*
C180-24	
C180T-24	
36 inch Lead	
C45-36	*Standard cord, blunt cut, one head*
C90-36	
C180-36	
C180T-36	
48 inch Lead	
C45-48	*Standard cord, blunt cut, one head*
C45-48P	*AC plug added*
C90-48	*Standard cord, blunt cut, one head*
C180-48	
C180T-48	
72 inch Lead	
C45-72	*Standard cord, blunt cut, one head*
C45-3DC-72P	*3-head daisy chain, AC plug added*
C90-72	*Standard cord, blunt cut, one head*
C90-72P	*AC plug added*
C180-72	*Standard cord, blunt cut, one head*
C180T-72	
144 inch Lead	
C90-144P	*AC plug added*
C45-2DC-144P	*2-head daisy chain, AC plug added*

Power Cords

ORION PART NUMBER CODE:

	1	2	3	4	5	6	7
Example	2	4	1	3	1	67	01

3 Conductors Unshielded, 14 Gauge, SJT, 5-15P Straight, C-13 Straight, 6'7", Black

1: Number of Conductors
- 1 = 2 Conductors
- 2 = 3 Conductors Unshielded
- 3 = 3 Conductors Shielded

2: AWG
- 2 = 12 Gauge
- 4 = 14 Gauge
- 6 = 16 Gauge
- 8 = 18 Gauge
- A = .75mm
- B = 1.0mm
- C = 1.5mm

3: Cord Type:
- 1 = SJT
- 2 = SVT
- 3 = SPT-1
- 4 = SJO
- 6 = H03VV-F
- 7 = H03VVH2-F
- 8 = H05VV-F

4: Plug
- 0 = None
- 1 = 1-15 Standard
- 2 = 1-15P Polarized
- 3 = 5-15P Straight
- 4 = 5-15P Right Angle
- 5 = 5-15P Hospital Grade Clear
- 6 = 5-15P Hospital Grade Gray
- 7 = C-14
- 8 = 6-15P
- 9 = 5-20P
- A = 003A Europe
- B = 006B Europe
- C = 010 Europe
- D = 010A Europe
- E = 012A UK
- F = 015 Australia
- G = 019 Europe

5: Connector
- 0 = None
- 1 = C-13 Straight
- 2 = C-13 Right Angle
- 3 = C-14
- 4 = C-15
- 5 = C-19
- 6 = C-17
- 7 = 022A
- 8 = 002-2

6: Length
- 18 = 1'8"
- 33 = 3'3"
- 50 = 5'0"
- 60 = 6'0"
- 67 = 6'7"
- 76 = 7'6"
- 80 = 8'0"
- 910 = 9'10"
- 100 = 10'0"
- 160 = 16'0"

7: Color Code
- 01 = Black
- 02 = Brown
- 03 = Gray
- 05 = White

INTERNATIONAL CORDAGE TYPES

Cord Type	AWG/Size	No. of Conductors	Temp. Std.	Rating °C Special	Voltage Rating	Description
SJT	18 - 14	3	60	75, 90, 105	300	Service Junior Thermoplastic
SVT	18 - 14	3	60	75, 90, 105	300	Service Vacuum Thermoplastic
SPT-1	18	2 or 3	60	75, 90, 105	300	Service Parallel Thermoplastic 1/64" Insulation
SPT-2	18 - 16	2 or 3	60	75, 90, 105	300	Service Parallel Thermoplastic 2/64" Insulation
SPT-3	18 - 10	2 or 3	60	75, 90, 105	300	Service Parallel Thermoplastic 3/64 Insulation
SJTW-A	18 - 14	3	60	75, 90, 105	300	Service Junior Thermoplastic - Outdoor Use
HPN	18 - 16	2 or 3	90	105	300	Heater Parallel Neoprene

Note: SJ, SJD, SJTO, SO, SV and SVO cordage is available by special order. Minimums may apply.

INTERNATIONAL CORDAGE TYPES

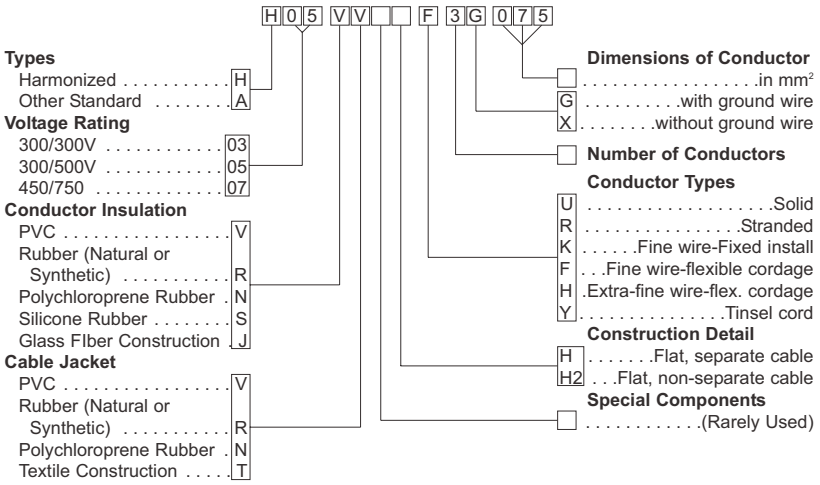

INTERNATIONAL APPROVALS:

Austria, Belgium, Denmark, Italy

Netherlands, Japan, Canada, United States, Germany, Australia

France, Finland, Sweden, United Kingdom, Switzerland, United Kingdom, Norway

END CUTS

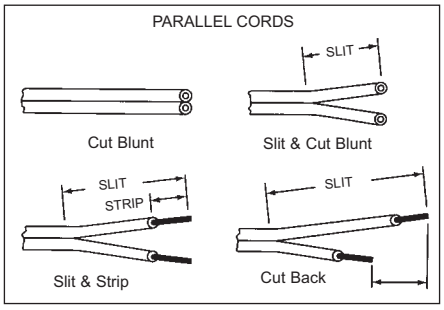

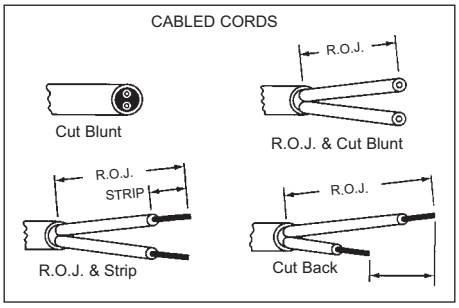

STANDARD PUT-UPS

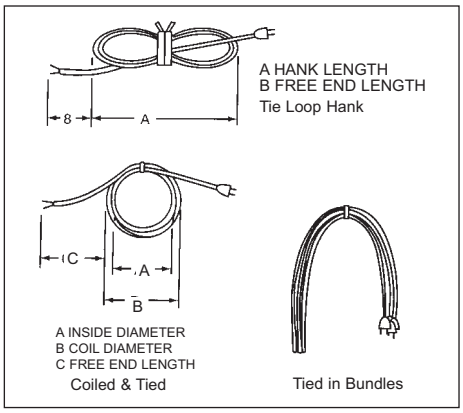

2 CONDUCTOR POWER CORDS

ORION Part Number	AWG	Cord Type	Length	NEMA Plug	NEMA Connector	Rating Amps @125VAC
18320-60-01	18	SPT-1	6'0"	1-15P	—	10
18320-90-01	18	SPT-1	9'0"	1-15p	—	10

5-15

3 CONDUCTOR POWER CORDS UNSHIELDED

5-20

6-15

ORION Part Number	AWG	Cord Type	Length	NEMA Plug	NEMA Connector	Rating Amps @125VAC
24130-67-01	14	SJT	6'7"	5-15P	—	15
24130-910-01	14	SJT	9'10"	5-15P	—	15
26130-67-01	16	SJT	6'7"	5-15P	—	13
26130-910-01	16	SJT	9'10"	5-15P	—	13
26180-910-01	16	SJT	9’10”	6-15P	—	13
26190-910-01	16	SJT	9’10”	5-20P	—	13
28180-910-01	18	SJT	9’10”	6-15P	—	13
28190-910-01	18	SJT	9’10”	5-20P	—	13
28130-67-01	18	SJT	6'7"	5-15P	—	10
28130-80-01	18	SJT	8’0”	5-15P	—	10
28130-910-01	18	SJT	9'10"	5-15P	—	10
28230-67-01	18	SVT	6'7"	5-15P	—	10
28230-910-01	18	SVT	9'10"	5-15P	—	10

ORION Part Number	AWG	Cord Type	Length	NEMA Plug	NEMA Connector	Rating Amps @125VAC
24131-67-01	14	SJT	6'7"	5-15P	C-13	15
24131-910-01	14	SJT	9'10"	5-15P	C-13	15
26131-67-01	16	SJT	6'7"	5-15P	C-13	13
26131-76-01	16	SJT	7'6"	5-15P	C-13	13
26131-910-01	16	SJT	9'10"	5-15P	C-13	13
28131-67-01	18	SJT	6'7"	5-15P	C-13	10
28131-76-01	18	SJT	7'6"	5-15P	C-13	10
28131-910-01	18	SJT	9'10"	5-15P	C-13	10
28231-76-01	18	SVT	7'6"	5-15P	C-13	10
26151-80-03	16	SJT	8'0"	5-15P	C-13	13
26151-100-03	16	SJT	10'0"	5-15P	C-13	13
26161-80-03	16	SJT	8'0"	5-15P	C-13	13
26161-100-03	16	SJT	10'0"	5-15P	C-13	13
26161-140-03	16	SJT	14'0"	5-15P	C-13	13

ORION Part Number	AWG	Cord Type	Length	NEMA Plug	NEMA Connector	Rating Amps @125VAC
28232-76-01	18	SVT	7'6"	5-15P	C-13	10
26132-76-01	16	SJT	7'6"	5-15P	C-13	13
28132-76-01	18	SJT	7'6"	5-15P	C-13	10

3 CONDUCTOR POWER CORDS UNSHIELDED

ORION Part Number	AWG	Cord Type	Length	NEMA Plug	NEMA Connector	Rating Amps @125VAC
26171-33-01	16	SJT	3'3"	C-14	C-13	13
28171-33-01	18	SJT	3'3"	C-14	C-13	10
28271-33-01	18	SVT	3'3"	C-14	C-13	10

ORION Part Number	AWG	Cord Type	Length	NEMA Plug	NEMA Connector	Rating Amps @125VAC
26101-67-01	16	SJT	6'7"	—	C-13	13
26101-910-01	16	SJT	9'10"	—	C-13	13
28101-67-01	18	SJT	6'7"	—	C-13	10
28101-910-01	18	SJT	9'10"	—	C-13	10
28201-76-01	18	SVT	7'6"	—	C-13	10

ORION Part Number	AWG	Cord Type	Length	NEMA Plug	NEMA Connector	Rating Amps @125VAC
26102-67-01	16	SJT	6'7"	—	C-13	13
26102-910-01	16	SJT	9'10"	—	C-13	13
28102-67-01	18	SJT	6'7"	—	C-13	10
28102-910-01	18	SJT	9'10"	—	C-13	10

3 CONDUCTOR POWER CORDS HOSPITAL GRADE UNSHIELDED

NORTH AMERICAN COLOR CODE

ORION Part Number	AWG	Cord Type	Length	NEMA Plug	NEMA Connector	Rating Amps @125VAC
28150-80-03	18	SJT	8'0"	5-15P	—	10
28150-100-03	18	SJT	10'0"	5-15P	—	10
28160-80-03	18	SJT	8'0"	5-15P	—	10
28160-100-03	18	SJT	10'0"	5-15P	—	10

ORION Part Number	AWG	Cord Type	Length	NEMA Plug	NEMA Connector	Rating Amps @125VAC
28151-80-03	18	SJT	8'0"	5-15P	C-13	10
28151-100-03	18	SJT	10'0"	5-15P	C-13	10
28161-80-03	18	SJT	8'0"	5-15P	C-13	10
28161-100-03	18	SJT	10'0"	5-15P	C-13	10

3 CONDUCTOR POWER CORDS SHIELDED

ORION Part Number	AWG	Cord Type	Length	NEMA Plug	NEMA Connector	Rating Amps @125VAC
34131-67-01	14	SJT	6'7"	5-15P	C-13	15
34131-910-01	14	SJT	9'10"	5-15P	C-13	15
36131-67-01	16	SJT	6'7"	5-15P	C-13	13
36131-910-01	16	SJT	9'10"	5-15P	C-13	13
38131-67-01	18	SJT	6'7"	5-15P	C-13	10
38131-910-01	18	SJT	9'10"	5-15P	C-13	10
38231-67-01	18	SVT	6'7"	5-15P	C-13	10
38231-910-01	18	SVT	9'10"	5-15P	C-13	10

ORION Part Number	AWG	Cord Type	Length	NEMA Plug	NEMA Connector	Rating Amps @125VAC
36132-67-01	16	SJT	6'7"	5-15P	C-13	13
36132-910-01	16	SJT	9'10"	5-15P	C-13	13
38132-67-01	18	SJT	6'7"	5-15P	C-13	10
38132-910-01	18	SJT	9'10"	5-15P	C-13	10
38232-67-01	18	SVT	6'7"	5-15P	C-13	10
38232-910-01	18	SVT	9'10"	5-15P	C-13	10

ORION Part Number	AWG	Cord Type	Length	NEMA Plug	NEMA Connector	Rating Amps @125VAC
36171-33-01	16	SJT	3'3"	C-14	C-13	13
38171-33-01	18	SJT	3'3"	C-14	C-13	10
38271-33-01	18	SVT	3'3"	C-14	C-13	10

ORION Part Number	AWG	Cord Type	Length	NEMA Plug	NEMA Connector	Rating Amps @125VAC
36101-67-01	16	SJT	6'7"	—	C-13	13
36101-910-01	16	SJT	9'10"	—	C-13	13
38101-67-01	18	SJT	6'7"	—	C-13	10
38101-910-01	18	SJT	9'10"	—	C-13	10
38201-67-01	18	SVT	6'7"	—	C-13	10
38201-910-01	18	SVT	9'10"	—	C-13	10

ORION Part Number	AWG	Cord Type	Length	NEMA Plug	NEMA Connector	Rating Amps @125VAC
36102-67-01	16	SJT	6'7"	—	C-13	13
36102-910-01	16	SJT	9'10"	—	C-13	13
38102-67-01	18	SJT	6'7"	—	C-13	10
38102-910-01	18	SJT	9'10"	—	C-13	10
38202-67-01	18	SVT	6'7"	—	C-13	10
38202-910-01	18	SVT	9'10"	—	C-13	10

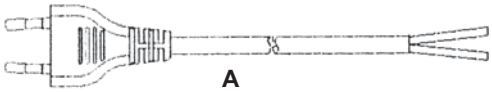
A

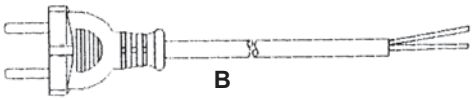
B

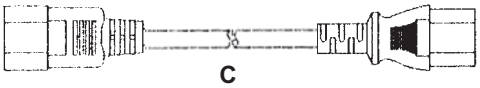
C

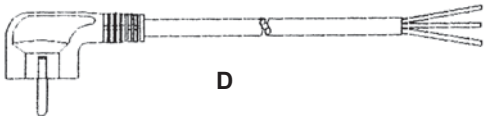
D

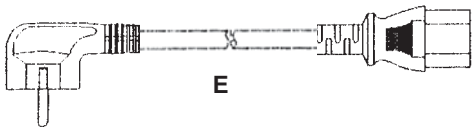
E

F

G

EUROPE

Fig.	ORION Number	Cond MM	Cord Type	Length	Plug	Conn	Amps 250VAC
A	1A6B020-01	2X.75	H03VV-F	2.0M	006B	—	2.5
B	1A7G020-01	2X.75	H03VVH2-F	2.0M	019	—	6
C	2B8A825-01	3X1.0	H05VV-F	2.5M	003A	002-2	10
D	2B8C025-01	3X1.0	H05VV-F	2.5M	010	—	10
E	2B8C825-01	3X1.0	H05VV-F	2.5M	010	002-2	10
F	2B8D025-01	3X1.0	H05VV-F	2.5M	010A	—	10
G	2B8D825-01	3X1.0	H05VV-F	2.5M	010A	002-2	10

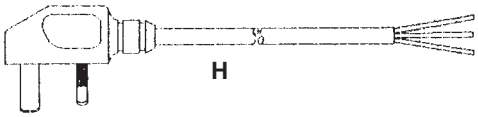
H

I

UNITED KINGDOM

Fig.	ORION Number	Cond MM	Cord Type	Length	Plug	Conn	Amps 250VAC
H	2B8E025-01	3X1.00	H05VV-F	2.5M	012A	—	10
I	2B8E825-01	3X1.00	H05VV-F	2.5M	012A	002-2	10

J

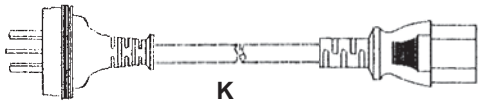
K

AUSTRALIA

Fig.	ORION Number	Cond MM	Cord Type	Length	Plug	Conn	Amps 250VAC
J	2B8F025-01	3X1.00	H05VV-F	2.5M	015	—	10
K	2B8F825-01	3X1.00	H05VV-F	2.5M	015	002-2	10

Receptacles

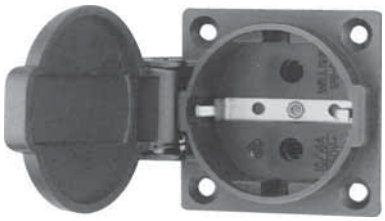

P/N: 023-C

P/N: 023-D

P/N: 042
C-13

P/N: 042-1
C-13

P/N: 043
C-19

P/N: 044
C-14

P/N: 044-0
C-18

P/N: 044-1
C-14

P/N: 044-2
C-14

P/N: 044-3
C-14

P/N: 044-4
C-14

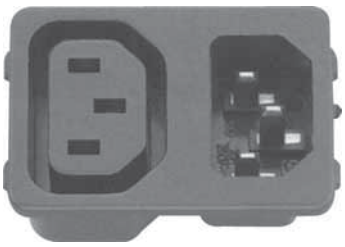

P/N: 044-5
C-13 & C-14

Plug Configurations

NEMA

VOLTAGE	NEMA	15 AMPERE Receptacle	15 AMPERE Plug	20 AMPERE Receptacle	20 AMPERE Plug	30 AMPERE Receptacle	30 AMPERE Plug	50 AMPERE Receptacle	50 AMPERE Plug	60 AMPERE Receptacle	60 AMPERE Plug
125V	1	1-15R	1-15P								
250V	2		2-15P	2-20R	2-20P	2-30R	2-30P				
125V	5	5-15R	5-15P	5-20R	5-20P	5-30R	5-30P	5-50R	5-50P		
250V	6	6-15R	6-15P	6-20R	6-20P	6-30R	6-30P	6-50R	6-50P		
277V, A.C.	7	7-15R	7-15P	7-20R	7-20P	7-30R	7-30P	7-50R	7-50P		
125/ 250V	10			10-20R	10-20P	10-30R	10-30P	10-50R	10-50P		
3Ø250V	11	11-15R	11-15P	11-20R	11-20P	11-30R	11-30P	11-50R	11-50P		
125/ 250V	14	14-15R	14-15P	14-20R	14-20P	14-30R	14-30P	14-50R	14-50P	14-60R	14-60P
3Ø250V	15	15-15R	15-15P	15-20R	15-20P	15-30R	15-30P	15-50R	15-50P	15-60R	15-60P
3ØY 120/208V	18	18-15R	18-15P	18-20R	18-20P	18-30R	18-30P	18-50R	18-50P	18-60R	18-60P

VOLTAGE	NEMA	15 AMPERE Receptacle	15 AMPERE Plug	20 AMPERE Receptacle	20 AMPERE Plug	30 AMPERE Receptacle	30 AMPERE Plug
125V	L1	L1-15R	L1-15P				
250V	L2			L2-20R	L2-20P		
125V	L5	L5-15R	L5-15P	L5-20R	L5-20P	L5-30R	L5-30P
250V	L6	L6-15R	L6-15P	L6-20R	L6-20P	L6-30R	L6-30P
277V, A.C.	L7	L7-15R	L7-15P	L7-20R	L7-20P	L7-30R	L7-30P
480V	L8			L8-20R	L8-20P	L8-30R	L8-30P
600V	L9			L9-20R	L9-20P	L9-30R	L9-30P

IEC Power Inlets

Rated Amperage	Equipment Class	Maximum Temperature	Male	Female
0.2	II	65°C	C2	C1
2.5	0	65°C	C4	C3
2.5	I	65°C	C6	C5
2.5	II	65°C	C8	C7
6	II	65°C	C10	C9
10	0	65°C	C12	C11
10	I	65°C	C14	C13

Rated Amperage	Equipment Class	Maximum Temperature	Male	Female
10	I	120°C	C16	C15
10	II	65°C	C18	C17
16	I	65°C	C20	C19
16	I	155°C	C22	C21
16	II	65°C	C24	C23

The above illustrations are included to show pin configurations and arrangements. Each configuration is available in several different "styles" of plugs including right angle, hospital-grade, shrouded, etc. Please call us if you need additional information or would like help selecting an appropriate connector for your application.

K515PASSM

Assembled 5-15P

KC13ASSM

Assembled C-13

KC14ASSM

Assembled C-14

Assembled Rewirable Connectors

Any cord length is now available on the spot with Orion rewirable Assembled plug heads and connectors. If our standard molded cord sets are not the correct length for your application, just purchase one of our longer cords, cut to size and use one of our assembled rewirable plugs or connectors for the perfect fit! The NEMA 5-15P, IEC320 C-13 and IEC320 C-14 configurations are all available. Knight Electronics and ORION can make any type of custom cables or harnesses exactly to your specifications. Please provide detailed information on the form provided in this catalog. Knight Electronics power cords are guaranteed against defects in workmanship and materials for 1 year and are available nationwide from our family of authorized distributors. Please call 800-323-2439 if you would like to speak to a sales representative.

POWER CORD DESIGN GUIDE

For Custom power cord applications please fill out the following form and fax it to 214-340-5870 and we will issue a quote on your requirements.

Company Name: _____

Contact: _____

Address: _____

City / State / Zip: _____

Telephone: _____

Web Address: _____ E-mail: _____

Quantity Req.: _____

Delivery Req.: _____

Cordage: _____

North American: XT, HPN, SPT-1, SPT-2, SPT-3, SVT, SJT, SJTW, SJTW-A, SJO, Other (Please Specify)
Europe & UK: HO3VVH2-F, HO3VV-F, HO5VV-F, Other (Please Specify)
Japan: VVF, HVVF, VCTFK, HHFF, VCTF, HVCTF
Australia: LFC-2F, GFC-2F, LFC-2R, GFC-2R, GFC-3R, LFC-3R
Other: Please Specify

Temperature Rating: _____ (60C, 85C, 105C)

No. of Conductors: _____ (2 or 3)

Wire Gauge: _____

North American: 12, 14, 16, 18, 20, Other (Please Specify)
Europe: 0.75mm, 1.00mm
Japan: 1.25mm, 2.00mm

Current Requirement: _____ / _____ (Amps / Volts)

Jacket Color: _____

Color Code: _____ (North American or European)

Shielding: _____ (None, Foil Aluminum, Braid, Foil and Braid)

Overall Length: _____ (Please specify meters or inches)

Plug: _____

IEC Connector: _____

Unterminated Cords: _____ (ROJ to what length?)

_____ (RIJ to what length?)

_____ (Tinned conductors?)

Terminals Required: _____ (Please specify type and associated conductors)

Knight Electronics, Inc.
10557 Metric Drive
Dallas, Texas 75243
214-340-0265

RoHS Compliant

Orion Fans
Information and data is subject to change without prior notification.

ABOUT THIS CROSS-REFERENCE

The following cross-reference material is for general information only. It covers the basic fan models for Comair-Rotron, Sunon, NMB, Nidec and Papst. In each case the crossed material is provided in a way that will allow you to find the appropriate ORION FAN equivalent in terms of size and voltage. Specifics such as CFM (airflow), static pressure curves, power draw and dB (noise) vary greatly among manufacturers and crosses are rarely exact. Therefore some thought must be given to choosing a replacement fan.

Instructions:
1. Find the closest part number match on the table below to the part number that you are crossing and make a note of the ORION recommended replacement.
2. Go to the quick size reference on the index page and find the ORION Series number.
3. Verify that the size (outside dimensions) and voltage (AC vs. DC) are the same as the fan that you are trying to cross.
4. Turn to the appropriate page and compare specifications.
5. If the ORION specifications are not within your tolerances then choose the model that most closely fits your requirements in terms of noise vs. CFM etc.

If you cannot find a suitable replacement for your fan in this catalog then please give us a call. We have several new fan models that are currently under development and many of our existing fans are available with alternate case configurations.

COMAIR-ROTRON	ORION	COMAIR-ROTRON	ORION	COMAIR-ROTRON	ORION	COMAIR-ROTRON	ORION
BD12B3	ODB600-12MB	FE24B3	OD8025-24HB	MC48B3	OD1238PT-48HB	PQ24C4	OD172SAP-24HB
BD24B3	ODB600-24MB	FE24H3	OD8025-24MB	MD12B1	OD1238PT-12HB	PQ48B4	OD172SAP-48HB
BD24C3	ODB600-24LB	FN12B3	OD9225-12HB	MD12B2	OD1238PT-12HTB	PQ48C4	OD172SAP-48HB
BD48B3	ODB600-48MB	FN12C3	OD9225-12MB	MD24B1	OD1238PT-24HB	WD12B3	OD1238PT-12MB
BD48C3	ODB600-48LB	FN24B3	OD9225-24HB	MD24B2	OD1238PT-24HTB	WD12C3	OD1238PT-12MB
BT2A1	OAB800AN-11-1S	FN24C3	OD9225-24MB	MD48B1	OD1238PT-48HB	WD12H3	OD1238PT-12LB
BT3A1	OAB800AN-22-1S	FS12B3	OD6025-12MB	MD48B2	OD1238PT-48HTB	WD12M3	OD1238PT-12LB
CLE2L2	OA254AP-11-1WB	FS12H3	OD6025-12LB	MR2B3	OA172SAN-11-1WB	WD24B3	OD1238PT-24MB
CLE2T2	OA254AP-11-1TB	FS24B3	OD6025-24HB	MR2D3	OA172SAN-11-3TB	WD24C3	OD1238PT-24MB
CLE3L2	OA254AP-22-1WB	FS24H3	OD6025-24LB	MR77B3	OA172SAN-22-1WB	WD24H3	OD1238PT-24LB
CLE3T2	OA254AP-22-1TB	FT12B3	OD1225PT-12HB	MR77D3	OA172SAN-22-3TB	WD24M3	OD1238PT-24LB
CR0212LB-G70	OD2510-12HB	FT12M3	OD1225PT-12MB	MU2A1	OA109AP-11-1TS	WD48B3	OD1238PT-48MB
CR0412HB-G70	OD4010-12HB	FT24B3	OD1225PT-24HB	MU3A1	OA109AP-22-1TS	WR2A1	OA109AP-11-3TS
CR0412HB-C50	OD4020-12HB	FT24M3	OD1225PT-24MB	MU2B1	OA109AP-11-1TB	WR2H1	OA109AP-11-2TS
CR0512HB-G90	OD5210-12HB	JQ12B4	OD172AN-12HB	MU3B1	OA109AP-22-1TB	WR2M1	OA109AP-11-3TS
CR0512HB-D71	NO CROSS	JQ24B4	OD172AN-24HB	MX2A1*	OA109AP-11-1TS	WR3H1	OA109AP-22-2TS
CR0612HB-D71GL	OD6015-12HB	JQ48B4	OD172AN-48HB	MX2A3	OA109AP-11-1TS	WR3A1	OA109AP-22-1TS
CR0624HB-A70GL	OD6025-24HB	MC12A3	OD1238PT-12HS	MX2B3	OA109AP-11-1TB	WX2A1	OA109AP-11-3TS
CR0812HB-A70GL	OD8025-12HB	MC12B3	OD1238PT-12HB	MX3A1*	OA109AP-22-1TS	WX2H1	OA109AP-22-2TS
CR0824HB-A70GL	OD8025-24HB	MC12E3	OD1238PT-12LS	MX3A3	OA109AP-22-1TS	WX2M1	OA109AP-11-2TS
CR0912HB-A70GL	OD9225-12HB	MC12G3	OD1238PT-12MS	MX3B3	OA109AP-22-1TB	WX3M1	OA109AP-22-2TB
CR0924HB-A70GL	OD9225-24HB	MC24A3	OD1238PT-24HS	PQ12B4	OD172SAP-12HB	WX3H1	OA109AP-11-1TB
FE12B3	OD8025-12HB	MC24B3	OD1238PT-24HB	PQ12C4	OD172SAP-12HB		
FE12H3	OD8025-12MB	MC24H3	OD1238PT-24MB	PQ24B4	OD172SAP-24HB		

SUNON	ORION	SUNON	ORION	SUNON	ORION	SUNON	ORION
KD0501BFB2	OD2010-05MB*	KD1206PHB2	OD6015-12MB*	KD2405PHS2	OD5215-24HS	DP201A2123HBL	OA109AP-22-1WB
KD0502PFS2	OD2510-05HS	KD1206PHS1	OD6015-12HS*	KD2405PHS3	OD5215-24MS	DP201A2123HBT	OA109AP-11-1TB
KD0504PFB2	OD4010-05HB	KD1206PHS2	OD6015-12MS*	KD2406PTS1	OD6025-24HS	DP201A2123HSL	OA109AP-22-1WS
KD0504PFB3	OD4010-05MB	KD1206PHS3	OD6015-12LS*	KD2406PTS2	OD6025-24MS	DP201A2123HST	OA109AP-22-1TS
KD0504PFS2	OD4010-05HS	KD1206PTB1	OD6025-12HB	KD2406PTS3	OD6025-24LS	DP201AT2122HBL	OA125AP-22-1WB
KD0504PFS3	OD4010-05MS	KD1206PTB2	OD6025-12MB	KD2408PTS1	OD8025-24HS	DP201AT2122HBT	OA125AP-22-1TB
KD0504PKS2	OD4020-05HS	KD1206PTB3	OD6025-12LB	KD2408PTS2	OD8025-24MS	DP201AT2122HSL	OA125AP-22-1WS
KD0504PKS3	OD4020-05MS	KD1206PTS2	OD6025-12MS	KD2408PTS3	OD8025-24LS	DP201AT2122HST	OA125AP-22-1TS
KD0505PHS2	OD5215-05HS	KD1206PTS3	OD6025-12LS	KD2409PTB1	OD9225-12HB	SF11508A1083HBL	OA80AP-11-1WB
KD0505PHS3	OD5215-05MS	KD1208PTB1	OD8025-12HB	KD2409PTB2	OD9225-12MB	SF11508A1083HSL	OA80AP-11-1WS
KD0506PHS1	OD6015-05HS*	KD1208PTB2	OD8025-12MB	KD2409PTB3	OD9225-12LB	SF11580AT1082HBL	OA825AP-11-1WB
KD0506PHS2	OD6015-05MS*	KD1208PTB3	OD8025-12LB	KD2409PTS1	OD9225-24HS	SF11580AT1082HSL	OA825AP-11-1WS
KD0506PHS3	OD6015-05LS*	KD1208PTS1	OD8025-12HS	KD2409PTS2	OD9225-24MS	SF11592A1092HBL	OA92AP-11-1WB
KD1201BFB2	OD2010-12HB	KD1208PTS2	OD8025-12MS	KD2409PTS3	OD9225-24LS	SF11592A1092HBT	OA92AP-11-1TB
KD1201BFS2	OD2010-12MS*	KD1208PTS3	OD8025-12LS	KD2412PMB1	OD1238PT-24HB	SF11592A1092HSL	OA92AP-11-1WS
KD1202PFB2	OD2510-12HB	KD1209PTS1	OD9225-12HS	KD2412PMB2	OD1238PT-24MB	SF11592A1092HST	OA92AP-11-1TS
KD1202PFS2	OD2510-12HS	KD1209PTS1	OD9225-12HS	KD2412PMB3	OD1238PT-24LB	SF23080A2083HBL	OA80AP-22-1WB
KD1204PFB2	OD4010-12HB	KD1209PTS2	OD9225-12MS	KD2412PMS1	OD1238PT-24HS	SF23080A2083HSL	OA80AP-22-1WS
KD1204PFB3	OD4010-12MB	KD1209PTS3	OD9225-12LS	KD2412PMS2	OD1238PT-24MS	SF23080AT2082HBL	OA825AP-22-1WB
KD1204PFS2	OD4010-12HS	KD1212PMB1	OD1238PT-12HB	KD2412PMS3	OD1238PT-24LS	SF23080AT2082HSL	OA825AP-22-1WS
KD1204PFS3	OD4010-12MS	KD1212PMB2	OD1238PT-12MB	KD2412PTB1	OD1225-24HB	SF23092A2092HBL	OA92AP-22-1WB
KD1204PKB2	OD4020-12HB	KD1212PMB3	OD1238PT-12LB	KD2412PTB2	OD1225-24MB	SF23092A2092HSL	OA92AP-22-1WS
KD1204PKB3	OD4020-12MB	KD1212PMS1	OD1238PT-12HS	KD2412PTB3	OD1225-24LB	SF2309A2092HBT	OA92AP-22-1TB
KD1204PKS2	OD4020-12HS	KD1212PMS2	OD1238PT-12MS	KD2412PTS1	OD1225-24HS	SF2309A2092HST	OA92AP-22-1TS
KD1204PKS3	OD4020-12MS	KD1212PMS3	OD1238PT-12LS	KD2412PTS2	OD1225-24MS	SP101AT1122HBL	OA125AP-11-1WB
KD1205PHB2	OD5210-12HB	KD1212PTS1	OD1225-12HS	KD2412PTS3	OD1225-24LS	SP101AT1122HBT	OA125AP-11-1TB
KD1205PHB3	OD5210-12MB	KD1212PTS2	OD1225-12MS	DP101A1123HBL	OA109AP-11-1WB	SP101AT1122HSL	OA125AP-11-1WS
KD1205PHS2	OD5215-12HS	KD1212PTS3	OD1225-12LS	DP101A1123HBT	OA109AP-11-1TB	SP101AT1122HST	OA125AP-11-1TS
KD1205PHS3	OD5215-12MS	KD2404PKS2	OD4020-24HS	DP101A1123HSL	OA109AP-11-1WS		
KD1206PHB1	OD6015-12HB*	KD2404PKS3	OD4020-24MS	DP101A1123HST	OA109AP-11-1TS		

EBM/PAPST	ORION	EBM/PAPST	ORION	EBM/PAPST	ORION	EBM/PAPST	ORION
412F	OD4010-12MS	4312L	OD1232-12L	6078S	OA172AN-22-1	8412GMV	8025 Rigel Series
412FH	OD4010-12HS	4312M	OD1232-12M	6212M	OD172SAP-12H	8412GLV	8025 Rigel Series
414F	OD4010-24MS	4314	OD1232-24HB	6224M	OD172SAP-24H	8412GV	8025 Rigel Series
412	OD4010-12MS	4318	OD1232-48HB	6224	OD172SAP-24H	8412L	OD8025-12LB
414	OD4010-24HS	4500N	OA109AP-11-1	6248	OD172SAP-48H	8412M	OD8025-12MB
612	OD6025-12HB	4530N	OA109AP-11-2	6248M	OD172SAP-48H	8414	OD8025-24HB
612L	OD6025-12LB	4600N	OA109AP-11-1	7006	OA172AN-11-1TB	8500N	OA80AP-11-1
612M	OD6025-12M	4600X	OA109AP-11-1TB	7056	OA172AN-22-1TB	8550N	OA80AP-22-1
614	OD6025-24HB	4600XP	OA109AP-11-1TB	7112	OD172SAPL-12H	8556N	OA80AP-22-1WB
3412	OD9225-12H	4606N	OA109AP-11-1	7114	OD172SAPL-24H	8800N	OA80AP-11-2
3412L	OD9225-12M	4606X	OA109AP-11-1TB	7118	OD172SAPL-48H	8506N	OA80AP-11-1WB
3412M	OD9225-12H	4650N	OA109AP-22-1	7212	OD172SAP-12H	8908	OA825AP-11-1
3414	OD9225-24H	4650X	OA109AP-22-1TB	7214	OD172SAP-24H	8908L	OA825AP-11-3
3906	OA92AP-11-1TB	4656N	OA109AP-22-1TB	7218	OD172SAP-48H	8958	OA825AP-22-1
3906L	OA92AP-11-2TB	4658N	OA109AP-22-1	7805S	OA162-5E-11-1WB	9906	OA125AP-11-1TB
3908	OA92AP-11-1	4800N	OA109AP-11-3	7806S	OA162-5E-11-1WB	9906L	OA125AP-11-2TB
3908L	OA92AP-11-2	4800X	OA109AP-11-2TB	7855S	OA162-5E-22-1WB	R1G190 Series	OAB190 Series
3958	OA92AP-22-1	4840N	OA109AP-11-1	7856S	OA162-5E-11-1WB	R2E220-AA40-23	OAB220-22-1
4212	OD1238-12M	4850X	OA09AP-22-3	8312	OD8032-12H	R2E220-AA44-23	OAB220-11-1
4212H	OD1238-12H	4908	OA125AP-11-1	8312MV	8032 Rigel Series	RL90-18/14N	ODB600AN
4214	OD1238-24M	4908L	OA125AP-11-2	8314	OD8032-24H	W2E142 Series	OA172SAPL Series
4214H	OD1238-24H	4958	OA125AP-22-1	8318	OD8032-48H	W2K121 Series	OA119 Series
4218C	OD1238-48M	6008S	OA172AN-11-1	8312L	OD8032-12L	W2E200 Series	OA225 Series
4218H	OD1238-48H	6028S	OA172AN-11-1	8312M	OD8032-12M	W2E250 Series	OA280 Series
4312	OD1232-12H	6058S	OA172AN-22-1	8412	OD8025-12HB		

NMB*	ORION	NMB*	ORION	NMB*	ORION	NMB*	ORION
1004KL-01W-B50*	OD2510-05HB	3110PS-23T-B30	OA825AP-22-1TB	4712KL-04W-B50	OD1232-12HB	5015KL-04T-B50	OD127-12HTB
1004KL-04W-B50	OD2510-12HB	3115PS-12W-B30	OA80AP-11-1WB	4712KL-05W-B50	OD1232-24HB	5015KL-04W-B50	OD127-12HB
1204KL-04W-B50	OD3010-12HB	3115PS-23W-B30	OA80AP-22-1WB	4712KL-07W-B50	OD1232-48HB	5915PC-12W-B30	OA172SAPL-11-1WB
1604KL-01W-B50	OD4010-05HB	3115PS-12T-B30	OA80AP-11-1TB	4715KL-04W-B50	OD1238-12HB	5915PC-23W-B30	OA172SAPL-22-1WB
1604KL-04W-B50	OD4010-12HB	3115PS-23T-B30	OA80AP-22-1TB	4715KL-05W-B50	OD1238-24HB	5915PC-12T-B30	OA172SAPL-11-1TB
1608KL-01W-B50	OD4020-05HB	3610KL-04W-B50	OD9225-12HB	4715KL-07W-B30	OD1238-48HB	5915PC-23T-B30	OA172SAPL-22-1TB
1608KL-04W-B50	OD4020-12HB	3610KL-05W-B50	OD9225-24HB	4715KL-04T-B50	OD1238-12HTB	5920PL-12W-B30	OD172SAP-11-1WB
2406KL-04W-B50	OD6015-12HB	3610PS-12W-B30	OA92AP-11-1WB	4715KL-05T-B50	OD1238-24HTB	5920PL-23W-B30	OD172SAP-22-1WB
2408NL-04W-B50	OD6020-12HB	3610PS-23W-B30	OA92AP-22-1WB	4715KL-07T-B30	OD1238-48HTB	5920PL-12T-B30	OD172SAP-11-1TB
2408NL-05W-B50	OD6020-24HB	3610PS-12T-B30	OA92AP-11-1TB	4715FS-12W-B30	OA109AP-11-1WBR	5920PL-23T-B30	OD172SAP-22-1TB
2410ML-04W-B50	OD6025-12HB	3610PS-23T-B30	OA92AP-22-1TB	4715FS-23W-B30	OA109AP-22-1WBR	6820PL-12W-B30	OD172AP-11-1WB
2410ML-05W-B50	OD6025-24HB	4710NL-04W-B50	OD1225-12HB	4715FS-12T-B30	OA109AP-11-1TBR	6820PL-23W-B30	OD172AP-22-1WB
3110KL-04W-B50	OD8025-12HB	4710NL-05W-B50	OD1225-24HB	4715FS-23T-B30	OA109AP-22-1TBR	6820PL-12T-B30	OD172AP-11-1TB
3110KL-05W-B50	OD8025-24HB	4710PS-12W-B30	OA125AP-11-1WB	4715MS-12W-B30	OA109AP-11-1WB	6820PL-23T-B30	OD172AP-22-1TB
3110PS-12W-B30	OA825AP-11-1WB	4710PS-23W-B30	OA125AP-22-1WB	4715MS-23W-B30	OA109AP-22-1WB		
3110PS-23W-B30	OA825AP-22-1WB	4710PS-12T-B30	OA125AP-11-1TB	4715MS-12T-B30	OA109AP-11-1TB		
3110PS-12T-B30	OA825AP-11-1TB	4710PS-23T-B30	OA125AP-22-1TB	4715MS-23T-B30	OA109AP-22-1TB		

NIDEC	ORION	NIDEC	ORION	NIDEC	ORION	NIDEC	ORION
TA100 DC		A30479	OA80AP-22-1TB	A30122	OA109AP-11-1	B33050	OD1238-12MB
C34230	OD2510-05MB	A30716	OA80AP-11-2TS	A30135	OA1091P-22-1	B33393	OD1238-24MB
C34237	OD2510-12MB	A32250	OA80AP-11-1TS	A30390	OA109AP-11-2	B34188-16	OD1238-24MB
C34245	OD2510-05HB	A32353	OA80AP-22-1TS	A30426	OA109AP-22-2	**TA500**	
C34240	OD2510-12HB	A32354	OA80AP-11-2TS	A30433	OA109AP-11-2	A30700	OA119AP-11-2TS
TA150DC		M33406	OD8025-12HB	A30444	OA109AP-22-2	A30704	OA119AP-22-2TS
C33830	OD4010-12MB	M33407	OD8025-24HB	A30769	OA109AP-11-3	A30200	OA119AP-11-1TS
C33842	OD4010-12HB	M33409	OD8025-12MB	A30925	OA109AP-22-3	A30324	OA119AP-22-1TS
C33903	OD4010-24HB	M33411	OD8025-24MB	A30926	OA109AP-11-3	A30330	OA119AP-11-1TB
C33920	OD4010-24MB	M33412	OD8025-12MB	A30927	OA109AP-22-3	A30332	OA119AP-22-1TB
C34246	OD4010-05HB	M33413	OD8025-24MB	A32655	OD1225-12HB	**TA600 DC SERIES**	
C34247	OD4010-05MB	M33414	OD8025-12LB	A32670	OD1225-24HB	A32550	OD172SAP-12HB
TA225 DC		M33415	OD8025-24LB	A32675	OD1225-12MB	A32590	OD172SAP-12HHB
M33394	OD6025-12LB	A33245	OD8015-12HB	A32680	OD1225-24MB	A32600	OD172SAP-24HHB
M33397	OD6025-24LB	A33315	OD8015-12HHB	A32685	OD1225-12LB	A33115	OD172SAP-12MB
M33399	OD6025-12LB	**TA350**		A32690	OD1225-24LB	A33142	OD172SAP-24MB
M33401	OD6025-24LB	M33416	OD9225-12LB	B31256	OD1238-12HB	A33230	OD172SAP-48HHB
M33402	OD6025-12LB	M33417	OD9225-24LB	B31257	OD1238-24HB	A30318	OA172SAPL-11-1TB
M33403	OD6025-24LB	M33418	OD9225-12MB	B31276	OD1238-12HB	A30322	OA172SAPL-22-
M33404	OD6025-12MB	M33419	OD9225-24MB	B31277	OD1238-24HB	1TB	
M33405	OD6025-24MB	M33420	OD9225-12HB	B31668-16	OD1238-12LB	**TA1000**	
M33455	OD6025-12HB	M33421	OD9225-24HB	B31787-16	OD1238-24LB	A30436	OA254AN-11-2TB
M33497	OD6025-24HB	M33422	OD9225-12HHB	B31873	OD1238-12MB	A30230	OA254AP-22-1TB
TA300		M33423	OD9225-24HHB	B32347-16	OD1238-12LB	A30205	OA254AP-11-1TB
A30473	OA80AP-11-1TS	**TA450**		B32832-16	OD1238-12LB		
A30475	OA80AP-22-1TS	A28678	OA109AP-22-1	B32837	OD1238-24MB		
A30477	OA80AP-11-1TB	A30108	OA109AP-11-1	B32861	OD1238-48HB		

*NMB to ORION cross reference covers ONLY high speed models. NMB suffix B50 or B30 is generally high speed and B10 is generally low speed. ORION uses H, M or L (High, Medium, Low) for DC fans and 1,2 or 3 (High, Medium, Low) for AC fans.

For complete cross reference, go to **www.orionfans.com.**

OEM PRICE *

AC Fans

Series No	VAC	Ball	Sleeve
OA60	115, 230	$16.00	$14.50
OA825	115, 230	$16.00	$14.50
OA80	115, 230	$14.50	$13.00
OA92	115, 230	$16.00	$14.50
OA938	115, 230	$16.00	$14.50
OA125	115, 230	$16.00	$14.50
OA109	115, 230	$15.50	$14.00
OA109 all metal	115, 230	$19.50	N/A
OA109 XC	115, 230	$18.00	N/A
O4715 Challenger	115, 230	$12.50	N/A
OA109 (AIOS)	115, 230	$15.50	$14.00
OA119	115, 230	$26.50	$22.00
OA162	115, 230	$40.00	N/A
OA5920 Challenger	115, 230	$31.50	N/A
OA172	115, 230	$41.00	N/A
OA172 XC	115, 230	$45.50	N/A
OA172SAPL	115, 230	$40.50	N/A
OA180	115, 230	$75.50	N/A
OA180APL	115, 230	$75.50	N/A
OA225	115, 230	$135.00	N/A
OA254AP	115, 230	$66.00	N/A
OA254AN	115, 230	$73.50	N/A
OA254AN XC	115, 230	$77.00	N/A
OA280	115, 230	$150.00	N/A

AC Fans Dual Voltage 115/230 VAC

Series No	VAC	Ball	Sleeve
OA825	115 / 230 Dual	$21.00	$18.00
OA80	115 / 230 Dual	$21.00	$18.00
OA92	115 / 230 Dual	$21.00	$18.00
OA938	115 / 230 Dual	$21.00	$18.00
OA125	115 / 230 Dual	$21.00	$18.00
OA109	115 / 230 Dual	$21.00	$18.00
OA119	115 / 230 Dual	$31.00	$27.50

AC Blowers

Series No	VAC	Ball	Sleeve
OAB190	115, 230	$87.50	N/A
OAB220	115, 230	$91.50	N/A
OAB800	115, 230	$27.00	$24.50
OAB908	115, 230	$86.00	N/A
OAB1231	115, 230	$30.00	N/A

AC Fan Trays

Model No.	Part No.	VAC	Ball
OA300S (short)	FTA-03115-014(BK)	115VAC	$175.00
OA600S (short)	FTA-06115-014(BK)	115VAC	$275.00
OA300	FTA-03115-018(BK)	115VAC	$175.00
OA600	FTA-06115-018(BK)	115VAC	$275.00
OA900	FTA-09115-018(BK)	115VAC	$375.00
OA300ST-120	FTA-018C311(HF)	120VAC	$175.00
OMB5200-120	FTA-520A211(HF)	120VAC	$330.00
OA302S (short)	FTA-03220-014(BK)	230VAC	$175.00
OA602S (short)	FTA-06220-014(BK)	230VAC	$275.00
OA302	FTA-03220-018(BK)	230VAC	$175.00
OA602	FTA-06220-018(BK)	230VAC	$275.00
OA902	FTA-09220-018(BK)	230VAC	$375.00
OA300ST-230	FTA-018C322(HF)	230VAC	$175.00
OMB5200-230	FTA-520A222(HF)	230VAC	$330.00
OA300S-DV (short)	FTA-03DV-014(BK)	115/230	$215.00
OA600S-DV (short)	FTA-06DV-014(BK)	115/230	$345.00
OA300-DV	FTA-03DV-018(BK)	115/230	$215.00
OA600-DV	FTA-06DV-018(BK)	115/230	$345.00
OA900-DV	FTA-09DV-018(BK)	115/230	$465.00

DC Fans**

Series No	VDC	Ball	Sleeve
OD2510	5, 12, 24	$13.50	N/A
OD3010	5, 12	$9.00	$8.00
OD4010	5, 12, 24	$9.00	$8.00
OD4010 SS	12	N/A	$4.65
OD4020	5, 12, 24	$9.00	$8.00
OD4020 SS	12, 24	N/A	$4.65

DC Fans** (continued)

Series No	VDC	Ball	Sleeve
OD4028	5, 12, 24	$10.00	$9.00
OD4028XC	12	$13.00	N/A
OD5210	5, 12, 24	$9.00	$8.00
OD6010	5, 12, 24	$9.00	$8.00
OD6015	5, 12, 24	$9.00	$8.00
OD6020	5, 12, 24	$9.00	$8.00
OD6025	5, 12, 24	$9.00	$8.00
OD6025	48	$12.00	$11.00
OD6025 SS	12, 24	N/A	$4.65
OD6038 VA	12, 24	$17.00	N/A
OD8025	5, 12, 24	$9.00	$8.00
OD8015	5, 12, 24	$9.00	$8.00
OD8025	5, 12, 24	$9.00	$8.00
OD8025	48	$12.00	$11.00
OD8025 SS	12, 24	N/A	$4.65
OD8032	12, 24	$12.00	$11.00
OD8032	48	$14.00	$13.00
OD8038	12, 24, 48	$16.00	N/A
OD9220	12, 24	$10.00	$9.00
OD9225	12, 24	$10.00	$9.00
OD9225	48	$12.00	$11.00
OD9238 VA	12, 24, 48	$17.00	N/A
OD1225	12, 24	N/A	$4.65
OD1225	12, 24	$15.50	$13.50
OD1225	48	$19.50	$17.00
OD1225 SS	12, 24	N/A	$10.00
OD1232	12, 24	$15.00	$13.00
OD1232	48	$20.00	$18.00
OD1238	12, 24	$17.50	$15.50
OD1238	48	$21.00	$19.00
OD1238 SS	12, 24	N/A	$11.00
OD1238AP(Metal)	12, 24	$19.50	N/A
OD1238 XC	12, 24	$21.00	N/A
OD1238 XC	48	$23.00	N/A
OD1238VA	12, 24	$25.00	N/A
OD127 XC	12, 24		$25.00
N/A			
OD127 XC	48	$27.00	N/A
OD127AP(Metal)	12, 24	$31.00	N/A
OD127AP(Metal)	48	$34.00	N/A
OD172SAPL	12, 24	$72.00	N/A
OD172SAPL	48	$74.00	N/A
OD172	12, 24	$78.50	N/A
OD172	48	$80.00	N/A
OD180	12, 24, 48	$110.00	N/A
OD254	12, 24	$120.00	N/A
OD254	48	$125.00	N/A

**Add $3.00 to the OEM price for special function DC fans: tachometer, thermal control, alarm and PWM

DC Blowers

Series No	VDC	Ball	Sleeve
ODB5009	12, 24	$22.00	N/A
ODB7530	12, 24	$18.50	N/A
ODB9733	12, 24	$18.50	N/A
ODB9733	48	$20.50	N/A
ODB600	12, 24	$23.50	$19.50
ODB600	48	$27.00	$23.00
ODB1232	12, 24, 48	$20.00	N/A

DC Fan Trays

Model No.	Part No.	VDC	Ball
OD300S-12 (short)	FTD-03012-014(BK)	12VDC	$200.00
OD600S-12 (short)	FTD-06012-014(BK)	12VDC	$300.00
OD300-12	FTD-03012-018(BK)	12VDC	$200.00
OD600-12	FTD-06012-018(BK)	12VDC	$300.00
OD900-12	FTD-09012-018(BK)	12VDC	$375.00
OD300S-24 (short)	FTD-03024-014(BK)	24VDC	$200.00
OD600S-24 (short)	FTD-06024-014(BK)	24VDC	$300.00
OD300-24	FTD-03024-018(BK)	24VDC	$200.00
OD600-24	FTD-06024-018(BK)	24VDC	$300.00
OD900-24	FTD-09024-018(BK)	24VDC	$375.00
OD300S-48 (short)	FTD-03048-014(BK)	48VDC	$220.00
OD600S-48 (short)	FTD-06048-014(BK)	48VDC	$330.00
OD300-48	FTD-03048-018(BK)	48VDC	$220.00
OD600-48	FTD-06048-018(BK)	48VDC	$330.00
OD900-48	FTD-09048-018(BK)	48VDC	$435.00

Spot Coolers

Model No	Voltage Input	Ball
OD9225-SPOT	115	$ 32.00
OD1232-SPOT	115	$ 36.00
OD1232-SPOT/DIN	115	$ 44.00

*Pricing indicated is for OEM's and is for 100 pcs. For larger quantity pricing please check with one of our franchised distributors or with our customer service. Check our website to locate a distributor in your area.

OEM Price *

Fan Accessories

2-Conductor Fan Cords

Part Number	OEM Price
C45-12	$1.50
C45-24	$1.75
C45-36	$2.00
C45-48	$2.25
C45-72	$2.75
C180-12	$1.50
C180-24	$1.75
C180-36	$2.00
C180-48	$2.25
C180-72	$2.75
C90-12	$1.50
C90-24	$1.75
C90-36	$2.00
C90-48	$2.25
C90-72	$2.75
C180T-12	$1.50
C180T-24	$1.75
C180T-36	$2.00
C180T-48	$2.25
C180T-72	$2.75
C45-2DC	$2.75
C45-3DC	$5.55
C45-4DC	$4.75
C45-6DC	$5.75
C45-9DC	$9.75

Wire Mesh Guards

Part Number	OEM Price
WMG60M	$3.25
WMG60B	$4.25
WMG80M	$3.50
WMG80B	$4.50
WMG92M	$3.75
WMG92B	$4.75
WMG120M	$4.25
WMG120B	$5.25
WMG172M	$5.50
WMG172B	$6.50
WMG127M	$5.35

Wire Finger Guards

Part Number	OEM Price
G25-2	$1.00
G40-2	$1.10
G60-4	$1.20
G80-18	$1.20
G80-18B	$1.50
G92-16	$1.20
G109-15A	$1.20
G109-15AB	$1.50
G109-3	$1.30
G119-8	$1.45
G172-10HA	$2.20
G172-10H	$2.20
G172-10LN	$2.50
G180-11	$3.50
G254-10P	$3.50
G225	$3.50
G280	$4.80

Filter Kits

Part Number	OEM Price
GRM40-XX	$1.30
GRM60-XX	$1.50
GRM80-XX	$1.70
GRM92-XX	$2.00
GRM120-XX	$2.35
GRM172-45	$2.85

Plastic Guards

G40P	$0.60
G60P	$0.75
G80P	$0.90
G92P	$1.00
G120P	$1.20
G172P	$1.50

Louvered Fan Guards

Part Number	OEM Price
LFG120B	$4.75
LFG172B	$5.25
LFG254B	$15.75

Fan power cords are available in any length or configuration by special order.

Please call us for a quote on your custom power cord requirements.

Add $0.25 per foot for lengths in excess of 72 inches on standard fan cords and lengths in excess of 24 inches on daisy chains.

Add $0.80 for a NEMA 1-15P AC plug on any cord. (Use suffix “P”)
Add $1.00 each for additional daisy chain cord head.

Contact us:
Knight Electronics
- ORION FANS
10557 Metric Drive
Dallas, Texas 75243
800-323-2439
214-340-0265
www.orionfans.com

Prices in U.S. Dollars.
Subject to change without notice.

*Pricing indicated is for OEM’s and is for 100 pcs. For larger quantity pricing please check with one of our franchised distributors or with our customer service. Check our website to locate a distributor in your area.