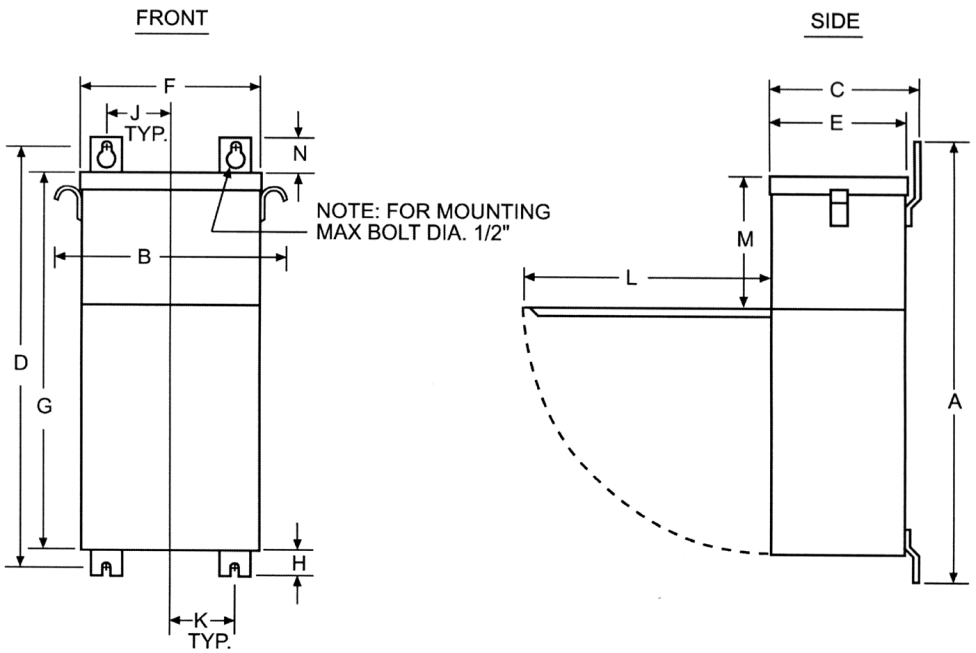

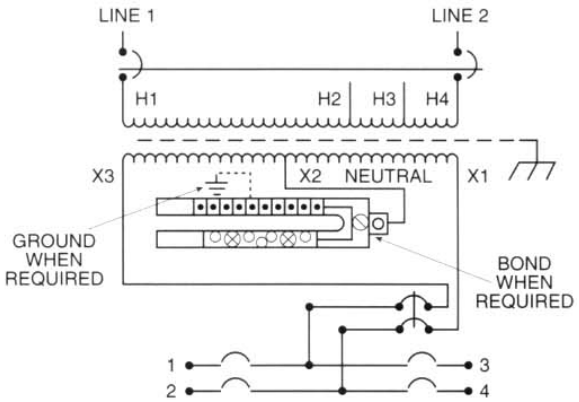

Revisions

Acme Electric Corporation
Power Distribution Products Division

PANEL-TRAN

Type No.

KVA	CATALOG NUMBER	VOLTAGE		Stainless Steel	WEIGHT	PHASE	FREQ.
		HIGH	LOW				
7.5	PT06-1150007-SS	480	120/240	304	160 Lbs	1	60 Hz

TYPICAL PERFORMANCE DATA

Winding Rise	115°C
Insulation	180°C
Sound Level	45 dB

Regulation @ 100% PF	

IMPEDANCE	

Typical Efficiency	
Full Load Losses	
No Load Losses	

A	B	C	D	E	F	G	H	J	K	L	M	N		
32.13	15.88	11.00	30.63	10.43	12.94	27.81	1.50	4.00	4.00	15.63	11.56	2.63		

					A	PRINTS TO	CONTROL 7	PT06-1150007-SS