MICRO SWITCH
a Honeywell Division
FED. MFG. CODE 91929

SWITCH – ENCLOSED

CATALOG LISTING
1LS56-L

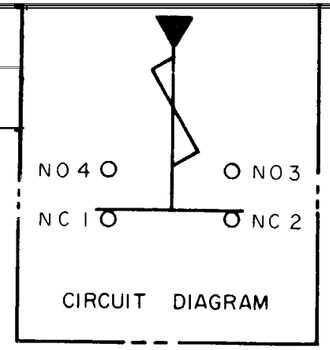

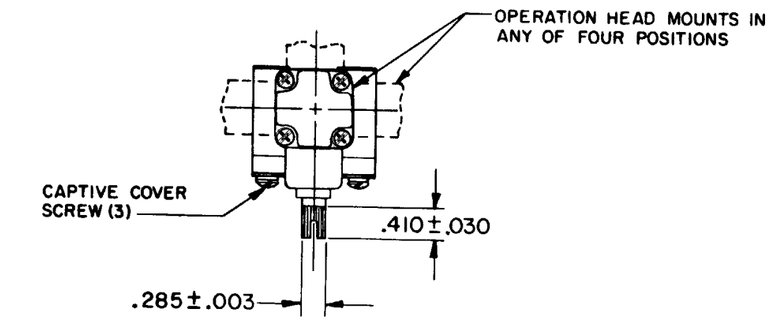

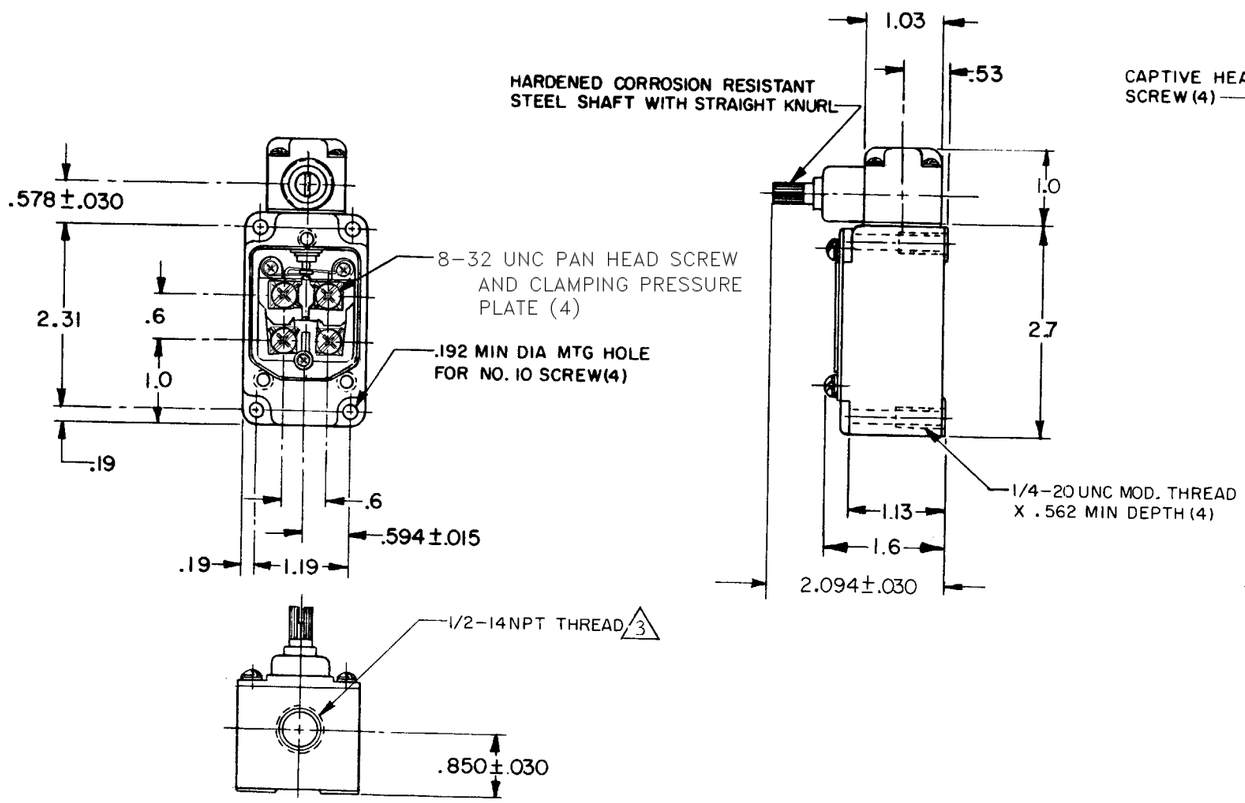

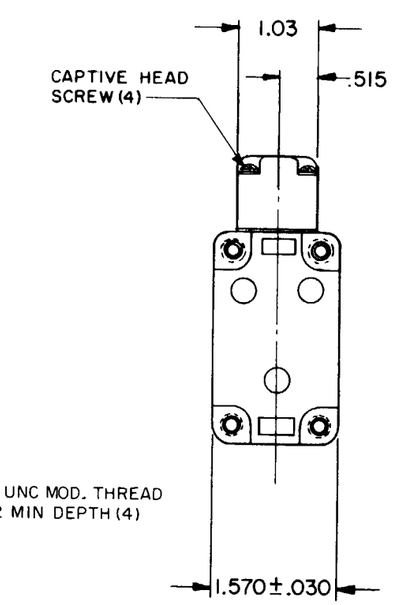

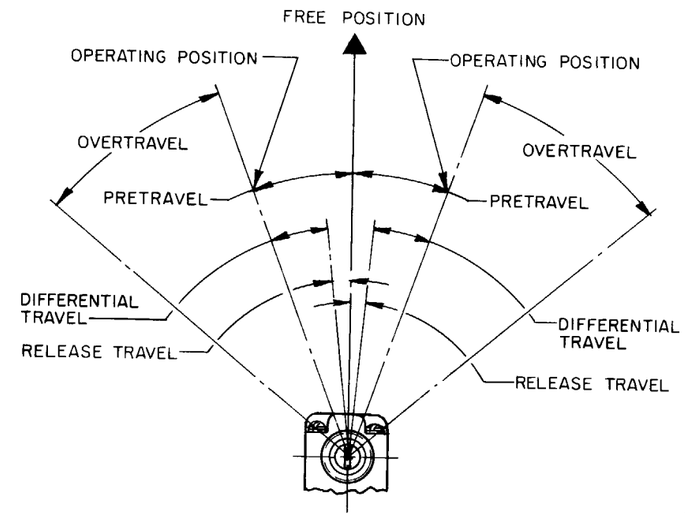

NOTES

1 - SWITCH IS ASSEMBLED FOR ACTUATION IN EITHER DIRECTION BUT MAY BE ADJUSTED TO ACTUATE THE SWITCH IN THE CLOCKWISE DIRECTION ONLY, THE COUNTERCLOCKWISE DIRECTION ONLY, OR IN BOTH DIRECTIONS

2 - TO CONVERT SWITCH FOR ACTUATION IN EITHER THE CLOCKWISE OR COUNTERCLOCKWISE DIRECTION ONLY, REMOVE ACTUATOR HEAD AND ROTATE THE NOTCHED PLUNGER 90° TO THE RIGHT FOR CLOCKWISE ACTUATION OR 90° TO THE LEFT FOR COUNTERCLOCKWISE ACTUATION

3 SEAL TO BE FURNISHED BY USER

THIS DRAWING COVERS A PROPRIETARY ITEM AND IS THE PROPERTY OF MICRO SWITCH, A DIVISION OF HONEYWELL. THIS DRAWING IS NOT TO BE COPIED OR USED WITHOUT THE APPROVAL OF MICRO SWITCH

THIRD ANGLE PROJECTION

SCALE 1/2 TO 1

DO NOT SCALE PRINT

UNLESS OTHERWISE SPECIFIED TOLERANCES ARE

ONE PLACE	(.0)	±.030
TWO PLACE	(.00)	±.015
THREE PLACE	(.000)	±.005
ANGLES		±

WEIGHT

CHARACTERISTICS	ELECTRICAL DATA
OPERATING TORQUE - - - 15 IN OZ MAX	CONTACT ARRANGEMENT (SEE CIRCUIT DIAGRAM)
RELEASE TORQUE - - - - 3 IN OZ MIN	L127 10A 125, 250 OR 480 VAC 1/4HP 125 VAC, 1/2HP 250 VAC
PRETRAVEL - - - - - - - - - - 5° MAX	
RELEASE TRAVEL - - - - - - 0° 30' MIN	
OVERTRAVEL - - - - - - - - - 30° MIN	
SWITCH-BASIC REPLACEMENT - - - - 2MN8-L	

REVISIONS
A CO-76997 GJW 3 APR 95

FORMTEK	DRAWN	GJW	3 APR 95	CHECK	JAF	5 MAY 95
				CHECK		
				CHECK		

CATALOG LISTING 1LS56-L
ISSUE M 6
PAGE 1 OF 1
RELEASE NO. PR-5373
REPLACES