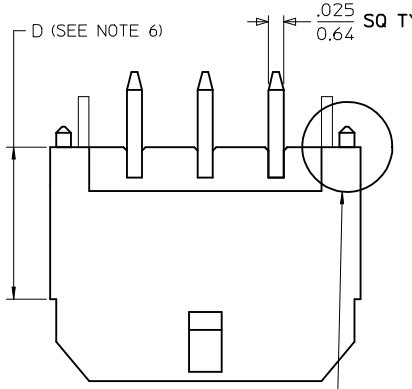

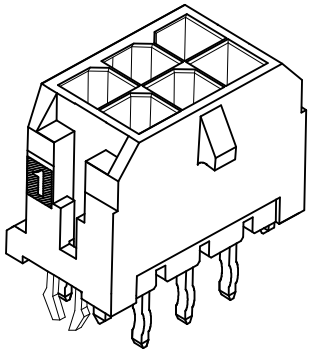

NOTE : (2) POLARIZATION PEGS ARE SHOWN.
HOWEVER, ASSEMBLIES MAY BE MANUFACTURED
WITH (1) PEG ONLY.

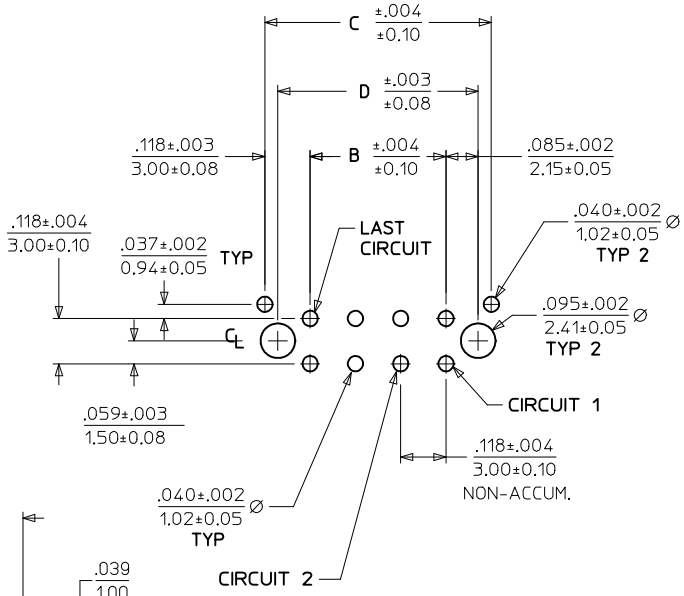

CKTS	A	B	C	D
02	.262 6.65	NA	.236 6.00	.169 4.30
04	.380 9.65	.118 3.00	.354 9.00	.287 7.30
06	.498 12.65	.236 6.00	.472 12.00	.405 10.30
08	.616 15.65	.354 9.00	.591 15.00	.524 13.30
10	.734 18.65	.472 12.00	.709 18.00	.642 16.30
12	.852 21.65	.591 15.00	.827 21.00	.760 19.30
14	.970 24.65	.709 18.00	.945 24.00	.878 22.30
16	1.088 27.65	.827 21.00	1.063 27.00	.996 25.30
18	1.206 30.65	.945 24.00	1.181 30.00	1.114 28.30
20	1.325 33.65	1.063 27.00	1.299 33.00	1.232 31.30
22	1.443 36.65	1.181 30.00	1.417 36.00	1.350 34.30
24	1.561 39.65	1.299 33.00	1.535 39.00	1.469 37.30

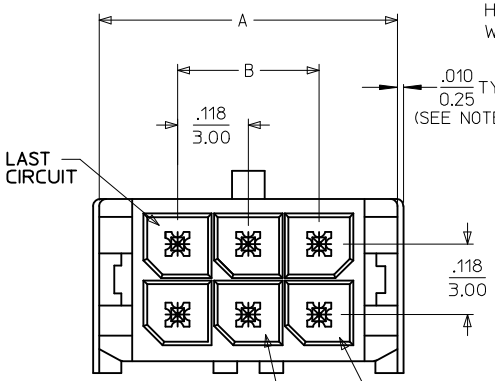

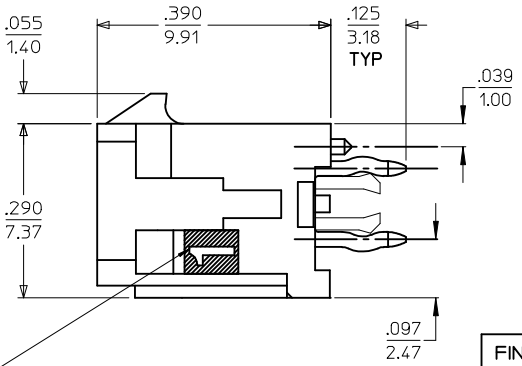

CIRCUIT "1" IDENTIFIED ON THIS SURFACE
(APPROX. LOCATION SHOWN FOR REF.)

PCB LAYOUT: COMPONENT SIDE
RECOMMEND PCB THICKNESS: .062/1.57

	FINISH A	FINISH B	FINISH C	FINISH D
CKTS	MATERIAL NO:	MATERIAL NO:	MATERIAL NO:	MATERIAL NO:
02	43045-0224	43045-0225	43045-0226	43045-0304
04	43045-0424	43045-0425	43045-0426	43045-0504
06	43045-0624	43045-0625	43045-0626	43045-0704
08	43045-0824	43045-0825	43045-0826	43045-0904
10	43045-1024	43045-1025	43045-1026	43045-1104
12	43045-1224	43045-1225	43045-1226	43045-1304
14	43045-1424	43045-1425	43045-1426	43045-1504
16	43045-1624	43045-1625	43045-1626	43045-1704
18	43045-1824	43045-1825	43045-1826	43045-1904
20	43045-2024	43045-2025	43045-2026	43045-2104
22	43045-2224	43045-2225	43045-2226	43045-2304
24	43045-2424	43045-2425	43045-2426	43045-2504

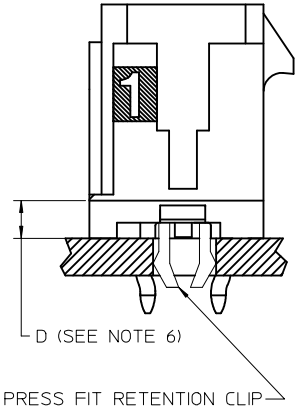

NOTES:

1. HOUSING MATERIAL: GLASS FILLED LIQUID CRYSTAL POLYMER, UL94V-0, COLOR: BLACK
   TERMINAL MATERIAL: BRASS ALLOY
2. FINISH: A = .000100/(0.00254) MIN. TIN OVER .000050/(0.00127) MIN. NICKEL PLATE.
   B = .000015/(0.00038) MIN. SELECT GOLD IN CONTACT AREA; .000100/(0.00254) MIN. SELECT MATTE TIN ON SOLDER TAILS; BOTH OVER .000050/(0.00127) MIN. NICKEL PLATE.
   C = .000030/(0.00076) MIN. SELECT GOLD IN CONTACT AREA; .000100/(0.00254) MIN. SELECT MATTE TIN ON SOLDER TAILS, BOTH OVER .000050/(0.00127) MIN. NICKEL PLATE.
   D = .000100/(0.00254) MIN. MATTE TIN OVER .000050/(0.00127) MIN. NICKEL PLATE.
3. PRODUCT SPECIFICATION: PS-43045
4. TRAY PACKAGED: SEE MOLEX DRAWING PK-70873-0314
5. MATES WITH MICRO FIT (3.0) RECEPTACLE SERIES 43025
6. CIRCUIT SIZES 2-6: "D" IS .265/6.74 FOR .010/0.25 STEP
   CIRCUIT SIZES 8-24: "D" IS .063/1.60 FOR .010/0.25 STEP.
7. THIS PART CONFORMS TO CLASS B REQUIREMENTS OF COSMETIC SPECIFICATION PS-45499-002.

ADD FINISH "D"
EC NO: UCP2014-3055 2014/01/24
DRWN:NNGUYEN 2014/01/24
CHKD:SSOUSEK 2014/04/21
APPR:FSMITH
DESCRIPTION
H2
REV

QUALITY SYMBOLS
=0
=0
=0

GENERAL TOLERANCES (UNLESS SPECIFIED)

	mm	INCH
4 PLACES	± ---	± ---
3 PLACES	± ---	± .010
2 PLACES	± 0.25	± .014
1 PLACE	± 0.36	± ---
0 PLACE	±	±

ANGULAR ±1/2°
DRAFT WHERE APPLICABLE MUST REMAIN WITHIN DIMENSIONS

DIMENSION STYLE: IN/MM
SCALE: ---
DESIGN UNITS: METRIC
THIRD ANGLE PROJECTION

		DATE
DRAWN BY	SAMIEC	2000/03/15
CHECKED BY	MUELLER	2000/03/15
APPROVED BY	EDGLEY	2000/03/15

TITLE: MICRO-FIT (3.0) DUAL ROW VERTICAL THRU HOLE HEADER W/CLIPS

molex

MATERIAL NO.: SEE CHART
DOCUMENT NO.: SD-43045-009
SHEET NO.: 1 OF 1
SIZE: C

THIS DRAWING CONTAINS INFORMATION THAT IS PROPRIETARY TO MOLEX INCORPORATED AND SHOULD NOT BE USED WITHOUT WRITTEN PERMISSION