TOSHIBA CMOS Digital Integrated Circuit Silicon Monolithic

TC83220-0028

TC83220-0028 Single-Chip CMOS LSI for FL (fluorescent) Calculator

The TOSHIBA printing/display calculator circuit TC83220-0028 is 14-digit calculator on single-chip CMOS LSI.

TC83220-0028 can drive the printing machine (M-48T; EPSON) with magnet driver circuit, and can drive the fluorescent display tube with DC-DC converter.

It contains a 4 K-word ROM, a 256 × 4-bit RAM.

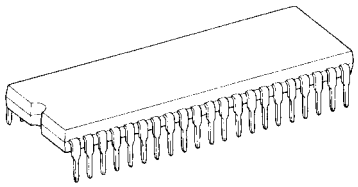

SDIP42-P-600-1.78

Weight: 4.12 g (typ.)

Features

Operational Features

- Print: 15 digits of data.
  (including decimal point) 1 digit of minus sign. 2 digits of operational symbol. 3 digits of commas.
  2-color printing. (black and red)
- Display: 14 digits of data. (including punctuation in each digit.)
  1 digit of floating minus sign, memory load, error symbol, grand total memory load. 3 digits of commas.
- Decimal output: Decimal set lock key controls output format.
  Fixed decimal setting (“0”, “2”, “3”, “4”, “6”), full floating decimal, and ADD mode.
- Key input buffer: 8 stages
- Function: 4 basic arithmetic functions (+, −, ×, ÷).
  Repeat addition and subtraction.
  Automatic constants in multiplication, division, percent calculation, calculations.
  Automatic percent add-on and percent discount calculation.
  Memory calculation.
  Automatic accumulating calculation.
  Gross margin profit calculation.
  Delta percent calculation.
  Tax calculation.
  Grand total calculation.
  Two-key rollover
- Item counter: 0~999 count up by depressing of [+], [−] key.
- Punctuation: Commas for thousands on display.
- Kinds of touch key: [0]~[9], [·], [00], [000], [C], [CE], [+/−], [#/P], [Feed], [+], [−], [◊], [*], [×], [÷], [=], [%], [MU/D], [M+], [M−], [IC], [M*], [Δ%], [→], [GT], [+TAX], [−TAX], [M◊]

- Kinds of lock key (refer to page 5.): "NP" printing mode selectable switch. (ON: nonprinting mode. OFF: printing mode.)
  "Σ" summation mode selectable switch.
  "5/4" "CUT" "UP" rounding switch. ("5/4": "CUT" and "UP" lock key off.)
  Fixed point mode selectable switch.
  "0", "2", "3", "4", "6", "F", "A". ("A": ADD mode. "F": full floating mode, all decimal setting lock key off.)
  "IC+" item counter mode selectable switch.
  "GT" grand total memory selectable switch.
  "SET", "CAL" tax memory selectable switch. ("SET": set mode. "CAL": normal calculation mode.)
- Duty of display: Duty = 1/17.77
- Leading zero suppression
- Trailing zero suppression
- Tax calculation (refer to page 5.): [+TAX] key is calculation for included tax.
  [−TAX] key is calculation for excluded tax.
  [SET] selects set mode for tax rate.
  [CAL] selects normal calculation mode.
  Changing lock key from [SET] to [CAL] stores number of display to tax memory.
  Changing lock key from [CAL] to [SET] recalls tax rate to display from tax memory.
  Depression of [+TAX] following data key at normal calculation mode performs the calculating included tax.
  Depression of [−TAX] following data key at normal calculation mode performs the calculating excluded tax.

Electrical Features

- P-MOS output buffer with pull down resistor for direct driving of fluorescent display tube.
- Oscillator/clock generator internal to chip.
- Key board encoding internal to chip.
- Shrink dual in line package.

Protection

(1) Double depression of keys will be inoperative.
(2) In the overflow condition, all key except "C", "CE", "Feed", "→" key are inoperative.
(3) Key bouncing protection (at 4 MHz clock)
  Key read in: 15 ms
  Key off: 40 ms

Pin Assignment (top view)

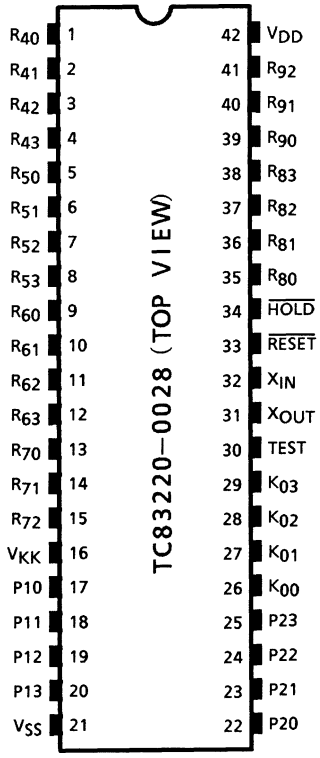

System Diagram

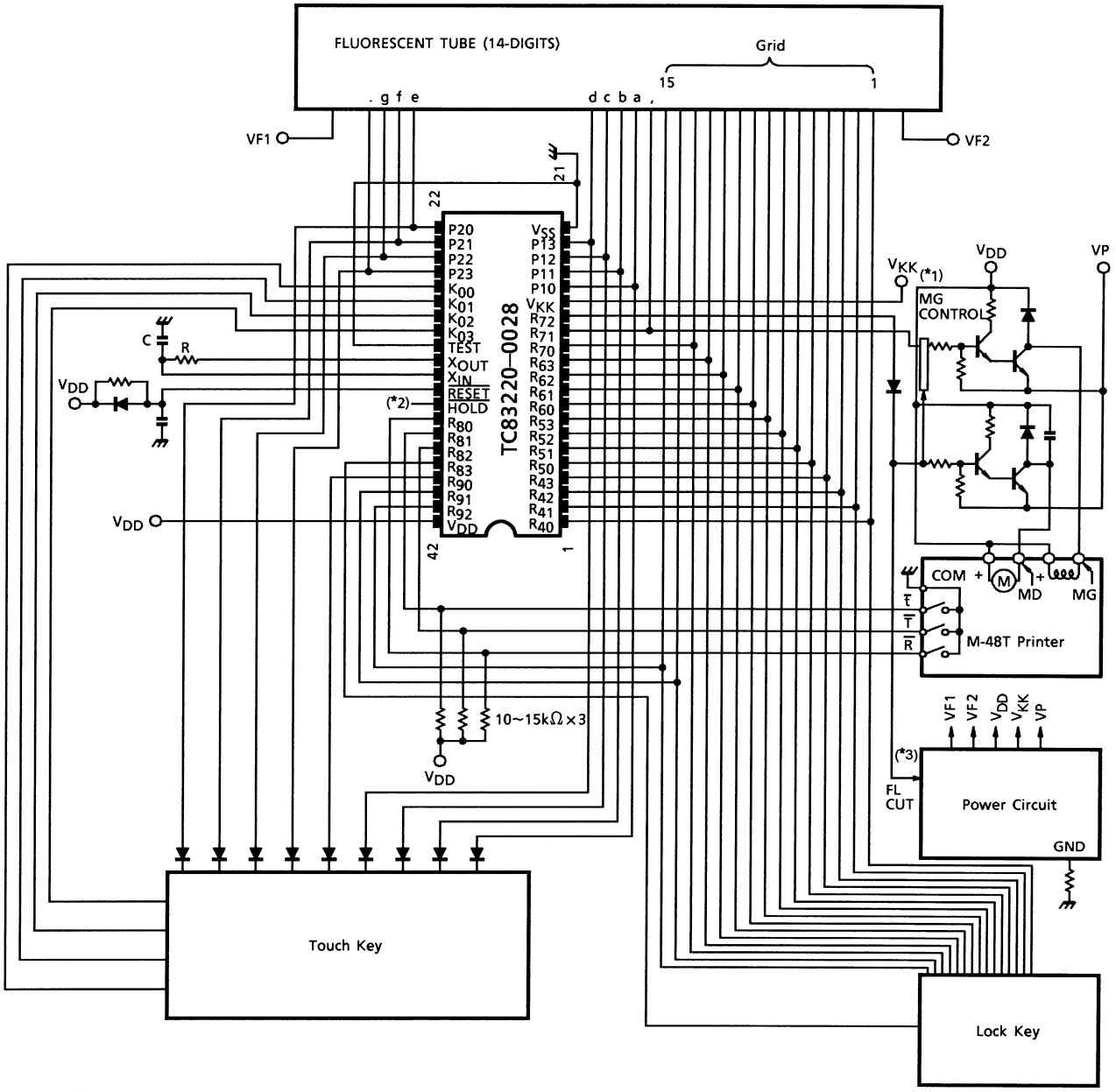

C = 100 pF

R = 1 kΩ ± 2%

VP: Power source to drive printer.

V_{KK}: Power source for display.

*1: MG control

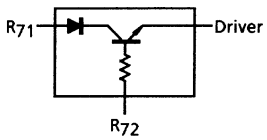

*2: FL cut (R_{72}) (VF1, VF2 cut at printing)

*3: Connection to $\overline{\text{HOLD}}$ pin is shown in the following page 13.

Connection of FL

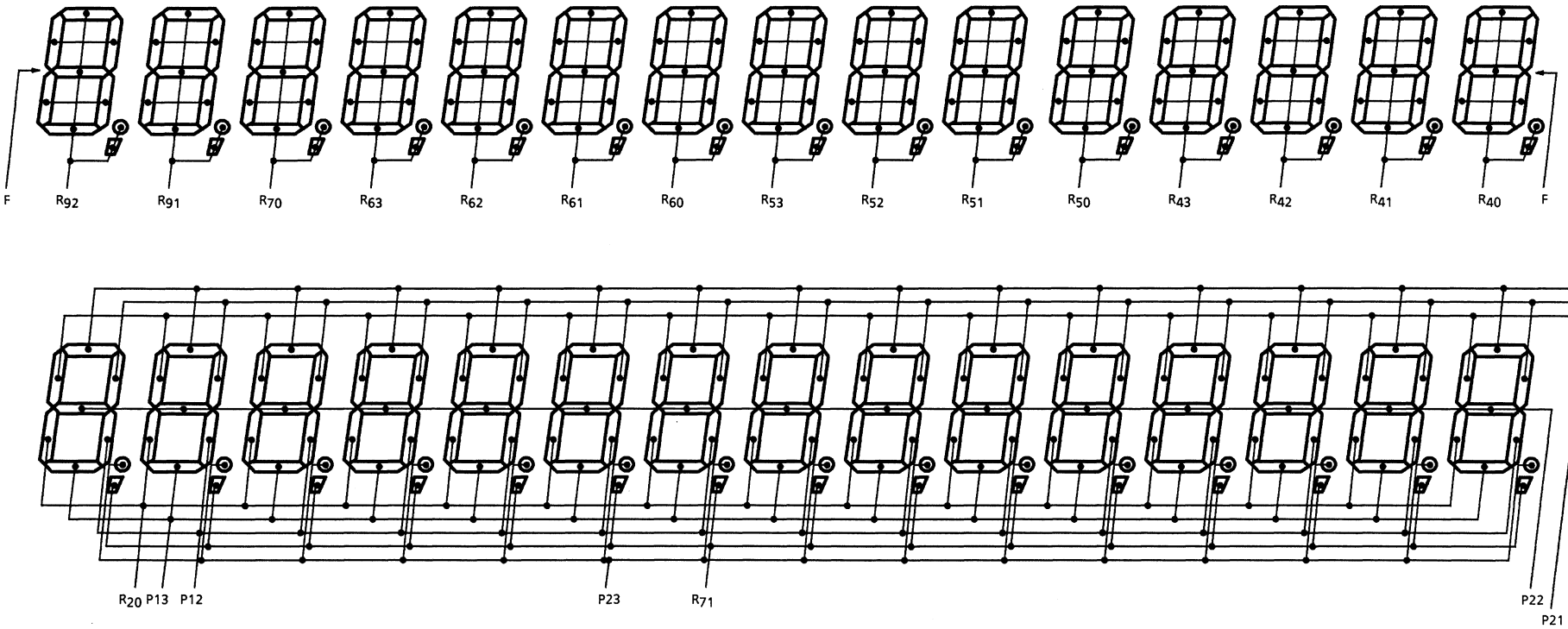

Note 1: R_{92} digit (P10, P13, P20) of “E” data.

Note 2: R_{92} digit (P22) of “–” data.

Note 3: R_{92} digit (P23) of “M” data.

Note 4: R_{92} digit (P21) of “GT” data.

Key Connection

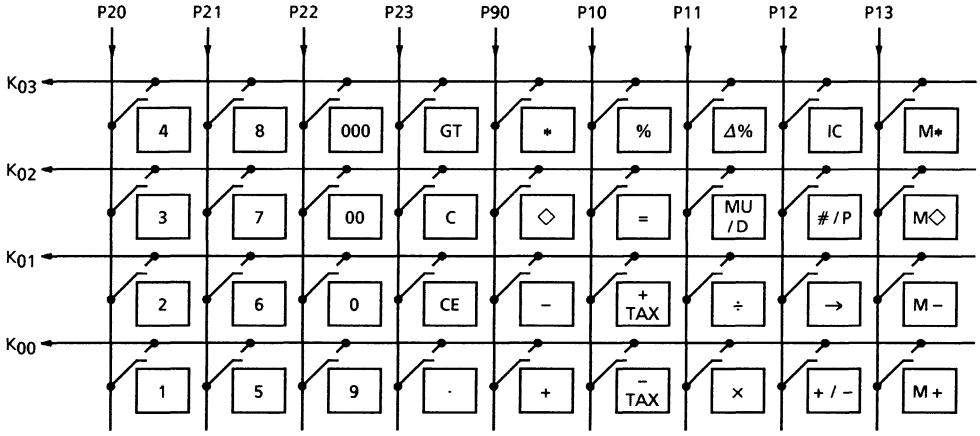

Touch Key

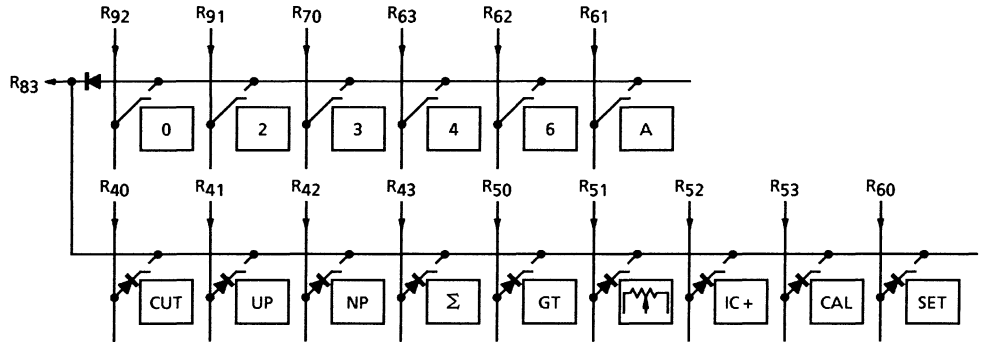

Lock Key

Note 5: : Feed

Operation Example

Key		Print	Print Color	Display
TAB 4/5 IC Σ GT MOD	Touch			
F 4/5 IC+ OFF OFF CAL	POWER ON	<PF>		0.
	C	C 0. 0 <PF>		0.
	00.78.09.04.9955 #/P	#0·78·09·04·9955····		0.7809049955
	.12345678909912 + ◊	0.1234567890991 + 001····· 0.1234567890991 ◊		0.1234567890991 0.1234567890991
	99999999999999 - ◊	99,999,999,999,999. - 001····· -99,999,999,999,999. ◊	R R	-99,999,999,999,999. -99,999,999,999,999.
	11111111111111 M- M◊	11,111,111,111,111. M - 001····· -11,111,111,111,111. M ◊	R R	M 11,111,111,111,111. M-11,111,111,111,111.
	11111111111111 M- M*	11,111,111,111,111. M - 001····· -11,111,111,111,111. M * <PF>	R R	M 11,111,111,111,111. -11,111,111,111,111.
3	1.23456 ÷ 789 =	1.23456 ÷ 789. = 0.002 * <PF>		1.23456 0.002
F	667.788 + #/P	667.788 + 667.788 ◊		667.788 667.788
	99999999999999 + 0.99999999999999 +	99,999,999,999,999. + 0.9999999999999 +		99,999,999,999,999. 99,999,999,999,999.
	10000000000000 + 1 - .000000000001 - 1 -	10,000,000,000,000. + 1. - 0.0000000000001 -	 R R	10,000,000,000,000. 9,999,999,999,999. 9,999,999,999,999.
	123456789.8 + 1.2345678 +	123,456,789.8 + 1.2345678 +		123,456,789.8 123,456,791.03456

Note 6: PRINT COLOR ..... R: Red

No mark: Black

<PF> ..... Paper feed

Key		Print	Print Color	Display
TAB 4/5 IC Σ GT MOD	Touch			
F 4/5 IC+ OFF OFF CAL	9999999999999 9 × 7777777777777 7 =	99,999,999,999,999. × 77,777,777,777,777. = ... 77777777777776. * <PF>		99,999,999,999,999. ←77,777,777,777,776.
	9999999900000 0 + 1234567.8 + CE 789012.3 +	99,999,999,000,000· + 1,234,567.8 + ... 1.0000000023456 * <PF> 789,012.3 +		99,999,999,000,000. ← 1.0000000023456 0. 99,999,999,789,012.
	9999999999999 9 + 1 M+ 1 + CE 9999999999999 9 +	99,999,999,999,999. + 1. M + 1. + ... 1.0000000000000 * <PF> 99,999,999,999,999. + ... 1.9999999999999 * <PF>		99,999,999,999,999. M 1. M← 1.0000000000000 M 0. M← 1.9999999999999
	3 × ÷ 2 ÷ × 4 ÷ -	3. × 3. ÷ 2. ÷ 2. × 4. ÷ 9. -	R	3. 9. 4.5 2.25 9. -9.
	11 + 345 - M-	11. + 345. - -334. M -	R	11. -334. M -334.

Note 6: PRINT COLOR ..... R: Red

No mark: Black

<PF> ..... Paper feed

Key		Print	Print Color	Display
TAB 4/5 IC Σ GT MOD	Touch			
F 4/5 IC+ OFF OFF CAL	2 ×	2. ×		2.
	3 =	3. =		
		6. +		
		<PF>		6.
OFF	2 MU/D	2. G M		2.
	3 =	3. %		
		0.061855670103 Δ *		
		2.061855670103 *		
		<PF>		2.061855670103
	2 ×	2. ×		2.
	3 %	3. %		
		0.06 *		
		<PF>		0.06
	+	2.06 + %		
		<PF>		2.06
	2 Δ%	2. Δ		2.
	3 =	3. =		
		1. Δ *		
		50. Δ %		
		<PF>		50.
	1111111111111			
	1 +/-			-11,111,111,111,111.
	#/P	#11111111111111·····	R	-11,111,111,111,111.
	2 ×	2. ×		2.
	3 %	3. %		
		0.06 *		
		<PF>		0.06
	-	1.94 - %		
		<PF>		1.94
SET		0. %		
		<PF>		0.
	3			3.
CAL		3. %		
		<PF>		0.
	1560			1,560.
	+TAX	1,560.		
		46.8 Δ		
		1,606.8 *		
		<PF>		1,606.8

Note 6: PRINT COLOR ..... R: Red

No mark: Black

<PF> ..... Paper feed

Key							Print	Print Color	Display
TAB	4/5	IC	Σ	GT	MOD	Touch			
F	4/5	IC+	OFF	OFF	CAL	5 ×	5. ×		5.
						=	5. =		
							25. *		
							<PF>		25.
						+TAX	25. ◊		
							0.75 Δ		
							25.75 *		
							<PF>		25.75
		OFF		GT		2 +	2. +		2.
						3 +	3. +		5.
						* (GT MODE)	5. G +		
							<PF>		5.
						GT	5. G ◊		5.
						GT	5. G *		
							<PF>		5.
		IC+		OFF		.123456789099			
						1 +	0.1234567890991 +		0.1234567890991
						*	001·····-···		
							0.1234567890991 *		
							<PF>		0.1234567890991
						2 -	2. -	R	-2.
						5 -	5. -	R	-7.
						IC	2.		2.

Note 6: PRINT COLOR ..... R: Red

No mark: Black

<PF> ..... Paper feed

Maximum Ratings (V_{SS} = 0 V)

Characteristics	Symbol	Rating	Unit
Supply voltage 1	V_{DD}	−0.5~7	V
Supply voltage 2	V_{KK}	−40~+0.5	V
Input voltage	V_{IN}	−35~V_{DD} + 0.5	V
Output voltage	V_{OUT}	−35~V_{DD} + 0.5	V
Output current	I_{OUT}	−10	mA
Power dissipation (T_{opr} = 70°C)	P_D	600	mW
Soldering temperature, time	T_{sld}	260 (10 s)	°C
Storage temperature	T_{stg}	−55~125	°C
Operating temperature	T_{opr}	0~40	°C

Recommended Operating Conditions (V_{SS} = 0 V)

Characteristics	Symbol	Test Circuit	Test Condition	Min	Max	Unit
Operating temperature	T_{opr}	—	—	0	40	°C
Supply voltage	V_{DD}	—	—	4.5	6	V
Supply voltage (FL)	V_{KK}	—	—	−30	−15	V
Supply voltage (hold)	V_{DDH}	—	—	2	6	V
Input high voltage (except schmitt circuit input)	V_{IH1}	—	$V_{DD} \geqq 4.5$	$V_{DD} \times 0.7$	V_{DD}	V
Input high voltage (schmitt circuit input)	V_{IH2}	—		$V_{DD} \times 0.75$	V_{DD}	V
Input high voltage	V_{IH3}	—	$V_{DD} < 4.5$ V	$V_{DD} \times 0.9$	V_{DD}	V
Input low voltage (except schmitt circuit input)	V_{IL1}	—	$V_{DD} \geqq 4.5$	V_{KK}	$V_{DD} \times 0.3$	V
Input low voltage (schmitt circuit input)	V_{IL2}	—		V_{KK}	$V_{DD} \times 0.25$	V
Input low voltage	V_{IL3}	—	$V_{DD} < 4.5$ V	V_{KK}	$V_{DD} \times 0.1$	V
Output voltage (source open drain)	V_{OUT}	—	—	V_{DD} − 35	V_{DD}	V
Clock high pulse width (Note 7)	T_{WCH}	—	$V_{IN} = V_{IH}$	80	—	ns
Clock low pulse width (Note 7)	T_{WCL}	—	$V_{IN} = V_{IL}$	80	—	ns

Note 7: In case of the external clock operation.

Electrical Characteristics

DC Characteristics (V_{SS} = 0 V, V_{DD} ± 10%, T_{opr} = 0~40°C)

Characteristics	Symbol	Test Circuit	Test Condition	Min	Typ.	Max	Unit
Hysteresis voltage (schmitt circuit input)	V_{HS}	—	—	—	0.7	—	V
Input current ($\overline{RESET}$, $\overline{HOLD}$, $\overline{TEST}$)	I_{IN}	—	V_{DD} = 5.5 V, V_{IN} = 5.5/0 V	—	—	±50	μA
Output leak current (source open drain)	I_{LO}	—	V_{DD} = 5.5 V, V_{OUT} = −32 V	—	—	−10	μA
Output high voltage (P1~P2, R_4~R_9)	V_{OH}	—	V_{DD} = 4.5 V, I_{OH} = −6 mA	2.4	—	—	V
Input pull down resistor (K_0, R_7~R_9)	R_{IN}	—	V_{DD} = 5.5 V, V_{KK} = −30 V	—	100	—	kΩ
Pull down resistor (source open drain)	R_{KK}	—		50	80	200	kΩ
Operating supply current	I_{DD0}	—	V_{DD} (V_{DDH}) 5.5 V, f_c = 4 MHz, V_{IN} = 5.3/0.2 V	—	3	6	mA
Supply current (after clear)	I_{KK1}	—	V_{KK} = −30 V, f_c = 4 MHz	—	0.6	0.9	mA
Supply current (shown full digits)	I_{KK2}	—		—	3.5	6	mA
Holding supply current	I_{DDH}	—	V_{DD} = 5.5 V	—	0.5	10	μA
Oscillating frequency	Fϕ	—	V_{DD} = 5.0 V, C = 100 pF R = 1 kΩ ± 2%	2.4	4.0	5.6	MHz

The Proposal of Outer Circuit for Tax Rate Holding with Back-Up Battery.

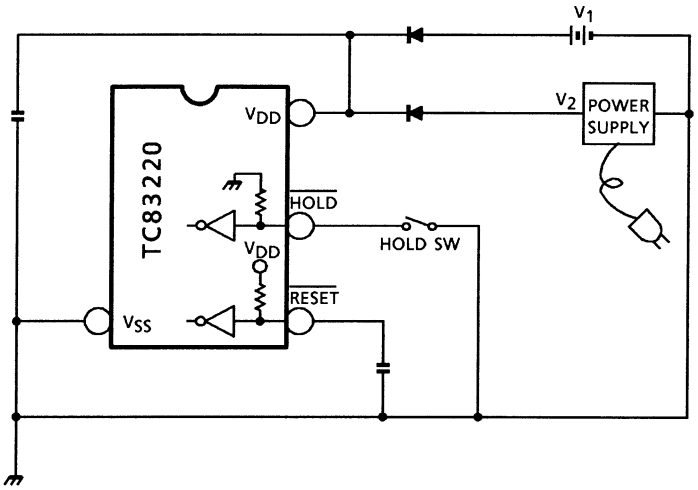

Note 8: V_1 = 3 V: Battery supply

V_2 = 5 V: DC supply

($\overline{\text{HOLD}}$ pin is pulled up in the LSI.
$\overline{\text{RESET}}$ pin is pulled up to V_{DD}.)

(1) Setting HOLD SW to OFF, the calculator operates normally under V_2 power supply.

(2) Setting HOLD SW to ON, the calculator will be in HOLD mode with TAX RATE that has already held, under V_2 power supply.

(3) TAX RATE that has already held is still held under V_1 power supply, even if there is no V_2 power supply (no DC power supply).

Note 9: V_1 (battery) should be supplied to the circuit after V_2 (DC) supply, because of prevention from exhaustion of battery and abnormal operation.

Package Dimensions

SDIP42-P-600-1.78 Unit : mm

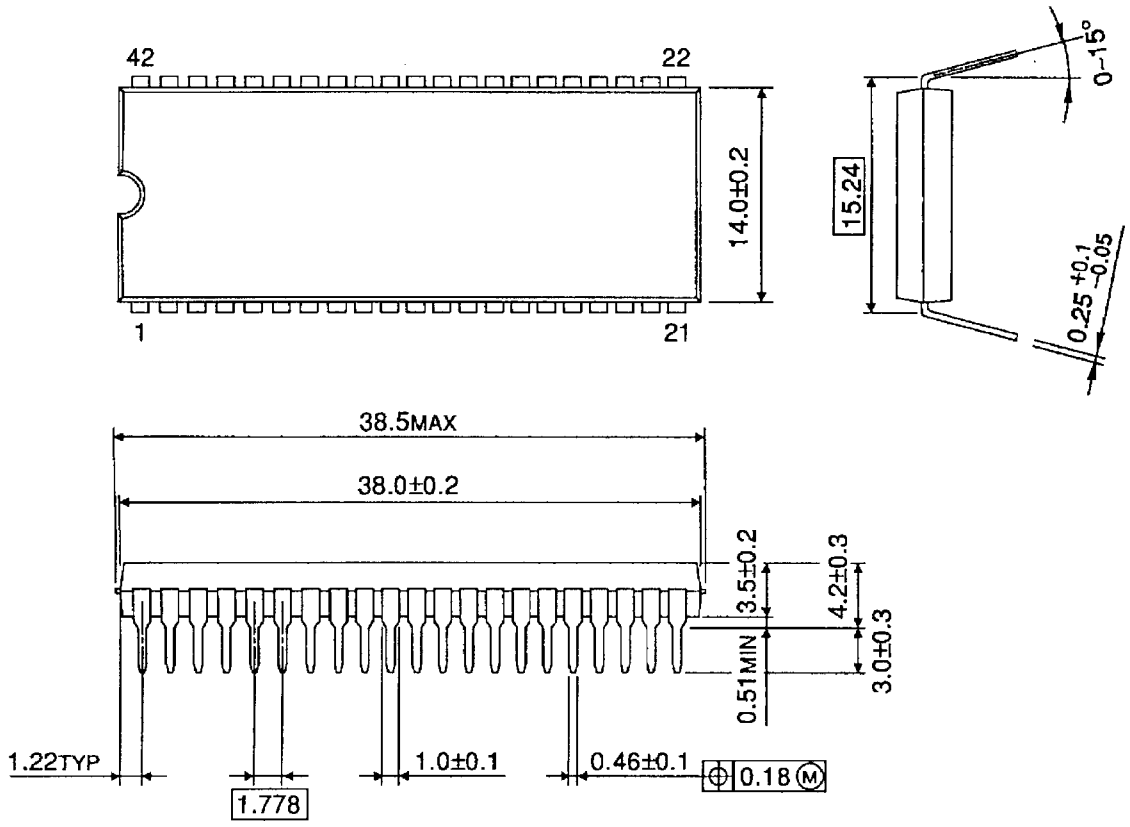

Weight: 4.12 g (typ.)

RESTRICTIONS ON PRODUCT USE

000707EBA

- TOSHIBA is continually working to improve the quality and reliability of its products. Nevertheless, semiconductor devices in general can malfunction or fail due to their inherent electrical sensitivity and vulnerability to physical stress. It is the responsibility of the buyer, when utilizing TOSHIBA products, to comply with the standards of safety in making a safe design for the entire system, and to avoid situations in which a malfunction or failure of such TOSHIBA products could cause loss of human life, bodily injury or damage to property.
  In developing your designs, please ensure that TOSHIBA products are used within specified operating ranges as set forth in the most recent TOSHIBA products specifications. Also, please keep in mind the precautions and conditions set forth in the “Handling Guide for Semiconductor Devices,” or “TOSHIBA Semiconductor Reliability Handbook” etc..
- The TOSHIBA products listed in this document are intended for usage in general electronics applications (computer, personal equipment, office equipment, measuring equipment, industrial robotics, domestic appliances, etc.). These TOSHIBA products are neither intended nor warranted for usage in equipment that requires extraordinarily high quality and/or reliability or a malfunction or failure of which may cause loss of human life or bodily injury (“Unintended Usage”). Unintended Usage include atomic energy control instruments, airplane or spaceship instruments, transportation instruments, traffic signal instruments, combustion control instruments, medical instruments, all types of safety devices, etc.. Unintended Usage of TOSHIBA products listed in this document shall be made at the customer’s own risk.
- The products described in this document are subject to the foreign exchange and foreign trade laws.
- The information contained herein is presented only as a guide for the applications of our products. No responsibility is assumed by TOSHIBA CORPORATION for any infringements of intellectual property or other rights of the third parties which may result from its use. No license is granted by implication or otherwise under any intellectual property or other rights of TOSHIBA CORPORATION or others.
- The information contained herein is subject to change without notice.