- VDC: 12, 24, 48
- RPM: 1500~5200
- CFM: 6.90~24.22
- Impeller:7 blades
- Rotational direction CCW view from front face
- PBT94V-0 frame and impeller
- AWG 24; UL 1007 lead wires
- Mass:55g

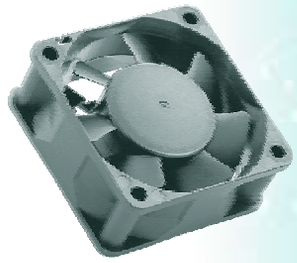

DC FAN 60x60x25mm

Specification

MODEL NO	Bearing (○ Sleeve ● Ball ◒ One ball and one sleeve ◎ Hydraulic)	Voltage (Vdc)	Current (Amp)	Speed (Rpm)	Input Power (Watts)	Air Flow (CFM)	Static Pressure (mm/H_2O)	Noise dB(A)	Weight Gram
B6025S12E	○	12	0.08	2600	0.96	11.50	1.90	22.9	55
B6025B12L	●	12	0.12	3300	1.44	14.97	2.96	25.2	55
B6025S12L	○	12	0.12	3300	1.44	14.97	2.96	25.2	55
B6025B12M	●	12	0.14	3900	1.68	17.66	3.95	29.3	55
B6025S12M	○	12	0.14	3900	1.68	17.66	3.95	29.3	55
B6025B12H	●	12	0.16	4500	1.92	20.69	5.36	34.1	55
B6025B24L	●	24	0.06	3300	1.44	14.97	2.96	25.2	55
B6025S24L	○	24	0.06	3300	1.44	14.97	2.96	25.2	55
B6025B24M	●	24	0.07	3900	1.68	17.66	3.95	29.3	55
B6025S24M	○	24	0.07	3900	1.68	17.66	3.95	29.3	55
B6025B24H	●	24	0.08	4500	1.92	20.69	5.36	34.1	55
B6025B24U	●	24	0.13	5200	3.12	24.22	7.21	38.3	55
B6025B48L	●	48	0.03	3300	1.44	14.97	2.96	25.2	55
B6025B48M	●	48	0.04	3900	1.92	17.66	3.95	29.3	55
B6025B48H	●	48	0.13	4500	6.24	20.69	5.36	34.1	55
C6025B12E	●	12	0.07	2600	0.84	11.50	1.90	22.9	55
C6025B12L	●	12	0.12	3300	1.44	14.97	2.96	25.2	55
C6025S12L	○	12	0.09	3300	1.08	14.97	2.96	25.2	55
C6025B12M	●	12	0.13	3900	1.56	17.66	3.95	29.3	55
C6025S12M	○	12	0.13	3900	1.56	17.66	3.95	29.3	55
C6025B12H	●	12	0.14	4500	1.68	20.69	5.36	34.1	55
C6025B24L	●	24	0.06	3300	1.44	14.97	2.96	25.2	55
C6025S24L	○	24	0.05	3300	1.20	14.97	2.96	25.2	55
C6025B24M	●	24	0.075	3900	1.80	17.66	3.95	29.3	55
C6025S24M	○	24	0.075	3900	1.80	17.66	3.95	29.3	55
C6025B24H	●	24	0.12	4500	2.88	20.69	5.36	34.1	55
C6025B48L	●	48	0.04	3300	1.92	14.97	2.96	25.2	55
C6025S48L	○	48	0.04	3300	1.92	14.97	2.96	25.2	55
C6025B48M	●	48	0.05	3900	2.40	17.66	3.95	29.3	55
C6025S48M	○	48	0.05	3900	2.40	17.66	3.95	29.3	55
C6025B48H	●	48	0.09	4500	4.32	20.69	5.36	34.1	55
D6025B12E	●	12	0.08	2600	0.96	11.50	1.90	22.9	55
D6025B12L	●	12	0.12	3300	1.44	14.97	2.96	25.2	55
D6025S12L	○	12	0.12	3300	1.44	14.97	2.96	25.2	55
D6025B12M	●	12	0.12	3900	1.44	17.66	3.95	29.3	55
D6025S12M	○	12	0.14	3900	1.68	17.66	3.95	29.3	55
D6025B24L	●	24	0.05	3300	1.20	14.97	2.96	25.2	55
D6025S24L	○	24	0.05	3300	1.20	14.97	2.96	25.2	55
D6025R24L	◎	24	0.06	3300	1.44	14.97	2.96	25.2	55
D6025B24M	●	24	0.07	3900	1.68	17.66	3.95	29.3	55
D6025S24M	○	24	0.07	3900	1.68	17.66	3.95	29.3	55
D6025B24H	●	24	0.08	4500	1.92	20.69	5.36	34.1	55
E6025B12H	●	12	0.12~0.23	1500~4500	1.44~2.76	6.90~20.69	0.75~5.36	23.3~34.1	55
E6025R12H	◎	12	0.10~0.22	1500~4500	1.20~2.64	6.90~20.69	0.75~5.36	23.3~34.1	55
F6025B12E	●	12	0.07	2600	0.84	11.50	1.90	22.9	55
F6025S12E	○	12	0.07	2600	0.84	11.50	1.90	22.9	55
F6025B12L	●	12	0.12	3300	1.44	14.97	2.96	25.2	55

Continue

- VDC: 12, 24, 48
- RPM: 1500~5200
- CFM: 6.90~24.22
- Impeller:7 blades
- Rotational direction CCW view from front face
- PBT94V-0 frame and impeller
- AWG 24; UL 1007 lead wires
- Mass:55g

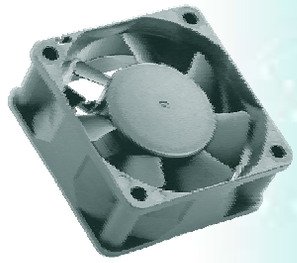

DC FAN 60x60x25mm

Specification

MODEL NO	Bearing (○ Sleeve ● Ball ◒ One ball and one sleeve ◯ Hydraulic)	Voltage (Vdc)	Current (Amp)	Speed (Rpm)	Input Power (Watts)	Air Flow (CFM)	Static Pressure (mm/H_2O)	Noise dB(A)	Weight Gram
F6025S12L	○	12	0.09	3300	1.08	14.97	2.96	25.2	55
F6025B12M	●	12	0.11	3900	1.32	17.66	3.95	29.3	55
F6025S12M	○	12	0.11	3900	1.32	17.66	3.95	29.3	55
F6025B12H	●	12	0.15	4500	1.80	20.69	5.36	34.1	55
F6025B24L	●	24	0.06	3300	1.44	14.97	2.96	25.2	55
F6025S24L	○	24	0.06	3300	1.44	14.97	2.96	25.2	55
F6025B24M	●	24	0.07	3900	1.68	17.66	3.95	29.3	55
F6025S24M	○	24	0.07	3900	1.68	17.66	3.95	29.3	55
F6025B24H	●	24	0.10	4500	2.40	20.69	5.36	34.1	55
F6025B24U	●	24	0.12	5200	2.88	24.22	7.21	38.3	55
F6025B48L	●	48	0.04	3300	1.92	14.97	2.96	25.2	55
F6025S48L	○	48	0.04	3300	1.92	14.97	2.96	25.2	55
F6025B48M	●	48	0.05	3900	2.40	17.66	3.95	29.3	55
F6025S48M	○	48	0.05	3900	2.40	17.66	3.95	29.3	55
F6025B48H	●	48	0.13	4500	6.24	20.69	5.36	34.1	55
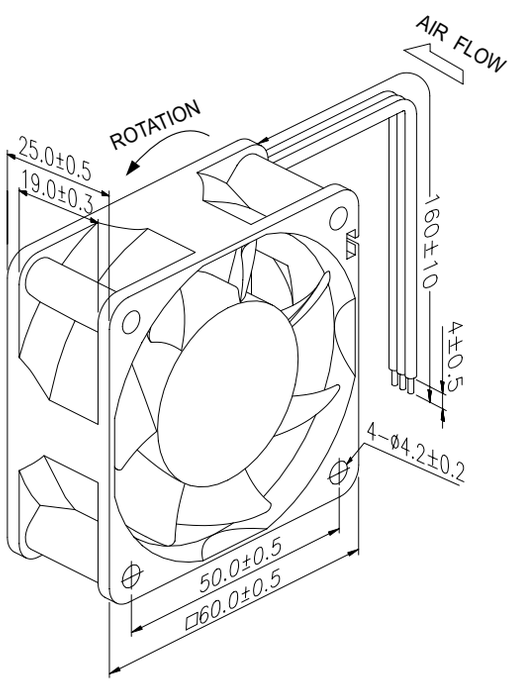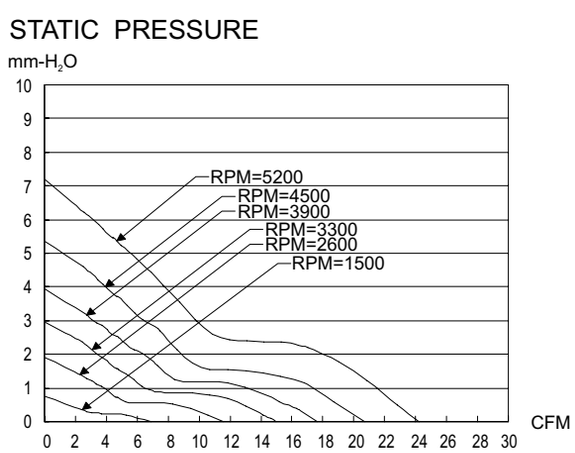
Design specifics subject to change without notice.