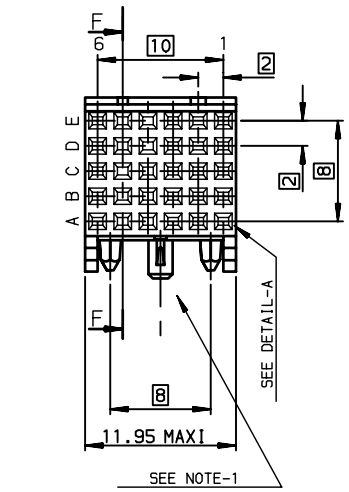

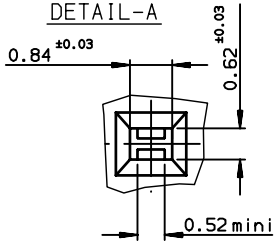

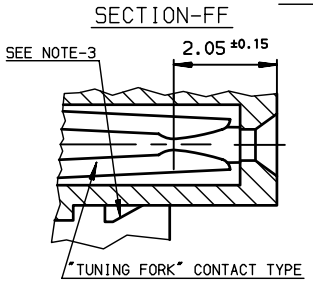

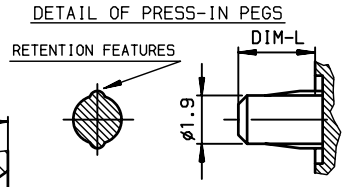

TIN LEAD PART NUMBER

Part Number:	HM1F51FDP000H6	
TERMINATION TYPE	D = 2.90 ±0.3	L = 3 ±0.05

LEAD-FREE PART NUMBER

Part Number:	HM1F51FDP000H6LF	
TERMINATION TYPE	D = 2.90 ±0.3	L = 3 ±0.05

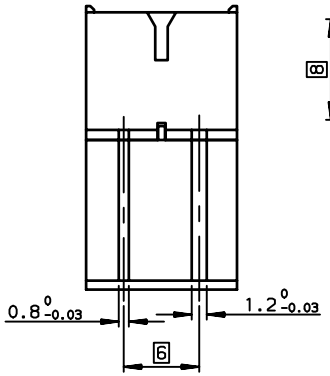

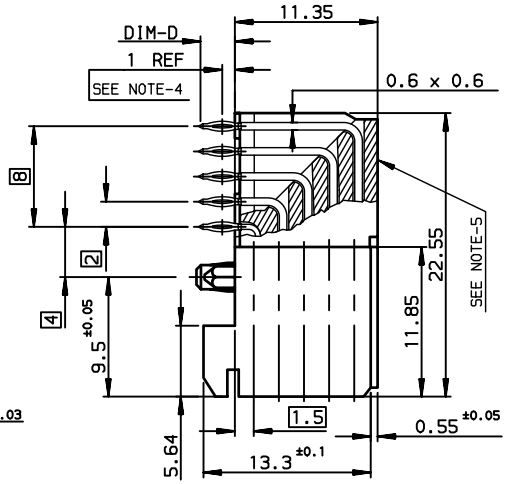

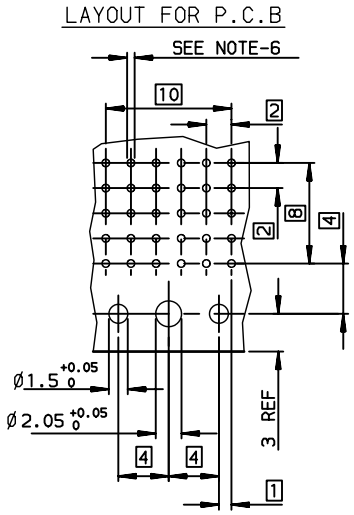

NOTE-1: PRESS-IN RETENTION PEG

NOTE-2: CONNECTORS WITH PCB-2.4mm ARE COMPATIBLE WITH WIDE AND NARROW BODIES

NOTE-3: PLUG FOR CODING KEY FIXING

NOTE-4: EYE OF THE NEEDLE PRESS-FIT CTS TYPE

NOTE-5: FLAT ROCK INSERTION TOOLING IN PCB, SEE DRW REF:C-8626-1003

NOTE-6: METALIZED HOLE DEFINITION,SEE GS-12-447

NOTE-7: IF SUFFIX "P" IS ADDED IN P/N, PACKAGING IS IN TRAYS, BUT CONNECTOR MARKING IS WITHOUT "P"
Example : HM1Fxxxxxxxx H6PLF,marking:HM1Fxxxxxxxx H6LF

GENERAL CHARACTERISTICS AND ROHS INFORMATIONS:

SEE GS-12-447

rev	ecn no	dr	date
C	-	SPE	2002/09/23
D	LS05-004	MLE	2005/02/17
E	LS06-0095	LGO	2006/06/30
F	LS06-0159	MLE	2006/10/16
G	LS07-0266	MLE	2007/11/06
-	-	-	-
-	-	-	-

European Views

www.fciconnect.com

surface ISO 1302 | tolerance std ISO 406 ISO 1101 | projection | mm

TOLERANCES UNLESS OTHERWISE SPECIFIED

Dr	CHAMPION	1991/09/25	ANGULAR	LINEAR	0.X	±0.1
Eng	CHAMPION	1991/09/25			0.XX	±0.1
Chr	LEGARE	1991/09/25	0.XX° ±2°		0.XXX	±0.1
Appr	LEGARE	1991/09/25	Product family		METRAL	

size A3 | Scale 1.5 | ECN LS07-0266 | Spec ref -

title: METRAL FEMALE 5R 30 WAY
RA PF/ PRESS-IN PEG

dwg no C-8626-0072 | Rev. G

catalog no - | CUSTOMER | sheet 1 of 1

REV F - 2006-04-17

Copyright FCI.