DWG. NO. SD-55447-012

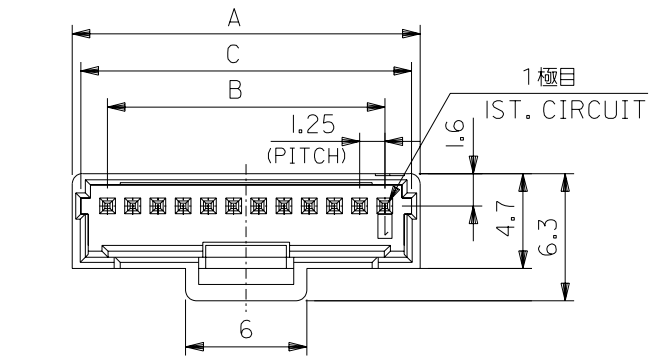

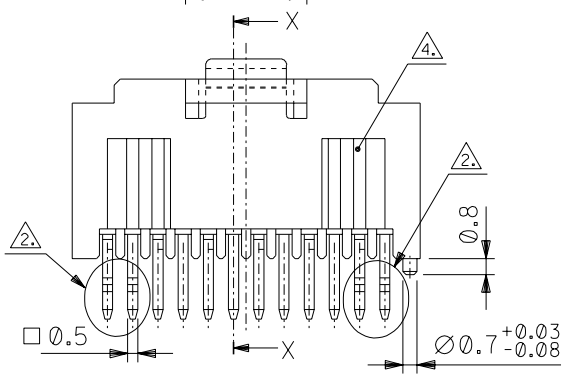

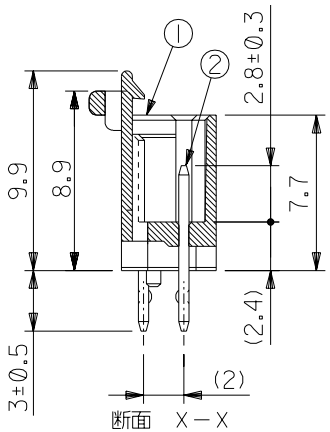

断面 X－X
SECTION X-X

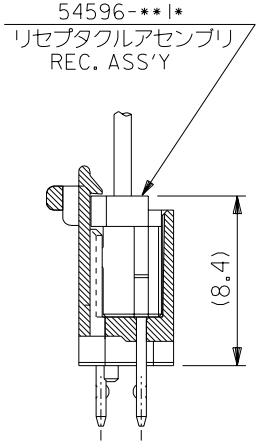

嵌合図
MATING REC.

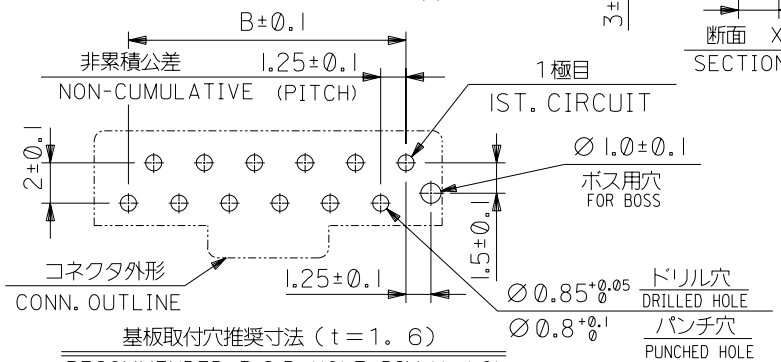

基板取付穴推奨寸法（t＝1．6）
RECOMMENDED P.C.B. HOLE DIM.(t=1.6)

番号 NO.	名称 NAME	原料 MATERIAL	数量 QT'Y	仕上げ FINISH
①	ウエハー WEFAR	ナイロン NYLON	1	UL94V-0
②	ピン PIN	黄銅 BRASS	N	全体錫メッキ PRE-TINNED

注)NOTES 1.原料および仕上げ：表参照
MATERIAL AND FINISH : SEE CHART
2. キンクは、両サイド4ピンに適用。
TO BE APPLICABLE 4 PIN OF BOTH SIDE.
3. 製品番号
MATERIAL NO.
55447-**8*
極数 CIRCUIT SIZE (02 ～ 20)
無鉛メッキ＆ショートアームロック
LEAD FREE&SHORT ARM LOCK
色 COLOR 0:自然色 NATURAL

4. 側面の溝は、10極以上に適用。
SIDE DITCHES MUST BE APPLICABLE OVER 10 CIRCUIT SIZE.

C	B	A	極数 CIRCUIT SIZE	3. 製品番号 MATERIAL NO.
26.4	23.75	27.25	20	55447-208*
25.15	22.5	26	19	-198*
23.9	21.25	24.75	18	-188*
22.65	20	23.5	17	-178*
21.4	18.75	22.25	16	-168*
20.15	17.5	21	15	-158*
18.9	16.25	19.75	14	-148*
17.65	15	18.5	13	-138*
16.4	13.75	17.25	12	-128*
15.15	12.5	16	11	-118*
13.9	11.25	14.75	10	-108*
12.65	10	13.5	9	-098*
11.4	8.75	12.25	8	-088*
10.15	7.5	11	7	-078*
8.9	6.25	9.75	6	-068*

MODEL NO. 55447-**8*

無鉛
LEAD FREE

DO NOT SCALE DRAWING

EC NO. DRWN: CH'K: APPR:	EC NO. DRWN: CH'K: APPR:	EC NO. DRWN: CH'K: APPR:	EC NO. DRWN: CH'K: APPR:	EC NO. J2003-2786 DRWN: N.YOSHIDA CH'K: M.YAGI '03/05/01 APPR: YO.ITO
				新規作成 RELEASED
				0

DESCRIPTION / REV

MATERIAL 材料: SEE CHART
FINISH 仕上げ: SEE CHART
WIRE RANGE 適用電線範囲: —#—
INS. RANGE 被覆外径: —#—

GENERAL TOLERANCES: (UNLESS SPECIFIED) 一般公差	
10 UNDER 未満	±0.2
10 OVER 以上 30 UNDER 未満	±0.25
30 OVER 以上	±0.3
ANGLE 角度	±3°

SCALE 4-1
DESIGN UNITS ☒mm ☐INCH
THIRD ANGLE PROJECTION
DIMENSIONS: ☐ mm/INCH ☐ INCH/mm ☒ mm ONLY
SHT REV
REVISE ON CAD ONLY

DRAWN BY & DATE N.YOSHIDA'03/02/07
CHECKED BY & DATE M.Yagi
APPROVED BY & DATE Y.Ito

TITLE:
Mini MiII 1-ROW WAFER ASS'Y (Sn)
SHORT ARM LOCK TYPE

molex MOLEX INCORPORATED

CAD FILENAME 55447012.S01
MATERIAL NO. SEE CHART
DRAWING NO. SD-55447-012
SHEET NO. 1 OF 2

THIS DRAWING CONTAINS INFORMATION THAT IS PROPRIETARY TO MOLEX INCORPORATED AND SHOULD NOT BE USED WITHOUT WRITTEN PERMISSION.

SIZE B

55447012.S01

EN-02J(097) MXJ-54

DWG. NO. SD-55447-012

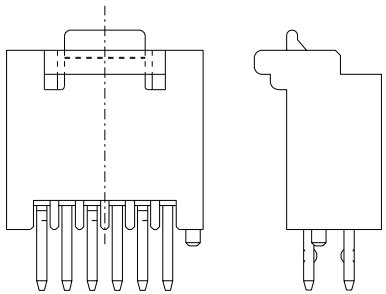

6極
6 CIRCUIT

6極のハウジング形状
SHAPE OF HS'G 6 CIRCUIT

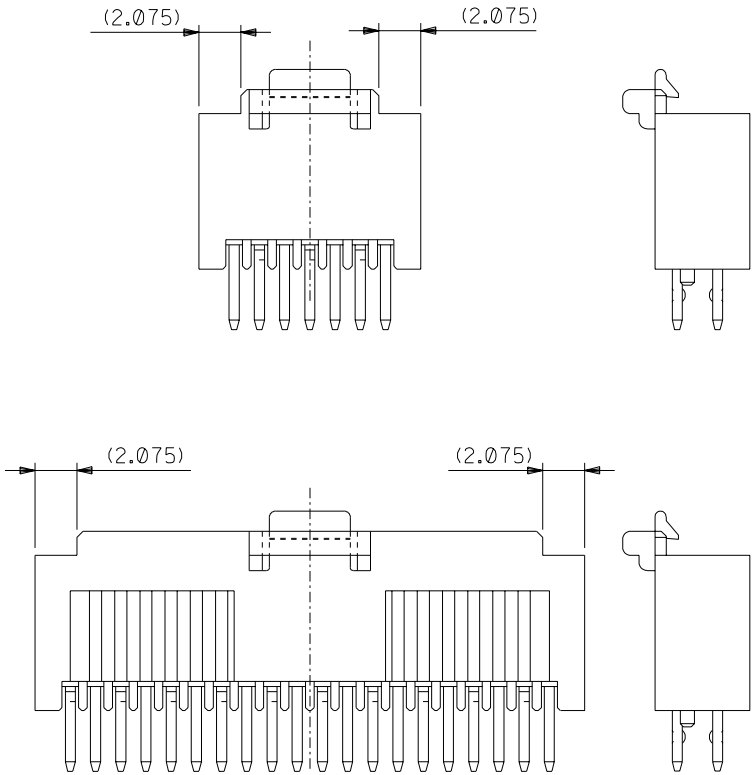

7極
7 CIRCUIT

20極
20 CIRCUIT

7極～20極のハウジング形状
SHAPE OF HS'G FROM 7 TO 20 CIRCUIT

無鉛
LEAD FREE

DO NOT SCALE DRAWING

EC NO. DRWN: CH'K: APPR:	EC NO. DRWN: CH'K: APPR:	EC NO. DRWN: CH'K: APPR:	EC NO. DRWN: CH'K: APPR:	SEE SHEET 1 OF 2 EC NO. DRWN: CH'K: APPR:	DESCRIPTION / REV

MATERIAL 材料: SEE SHEET 1 OF 2

FINISH 仕上げ: SEE SHEET 1 OF 2

WIRE RANGE 適用電線範囲: —#—

INS. RANGE 被覆外径: —#—

GENERAL TOLERANCES: (UNLESS SPECIFIED) 一般公差	
10 UNDER 未満	±0.2
10 OVER 以上 30 UNDER 未満	±0.25
30 OVER 以上	±0.3
ANGLE 角度	±3°

SCALE 4-1 | DESIGN UNITS ☒mm ☐INCH | THIRD ANGLE PROJECTION

DRAWN BY & DATE: N. YOSHIDA '03/02/07

CHECKED BY & DATE: M. Nagai

APPROVED BY & DATE: Y. Oto

CAD FILENAME: 55447012.S02

DIMENSIONS: ☐ mm/INCH ☐ INCH/mm ☒ mm ONLY | SHT | REV

REVISE ON CAD ONLY

TITLE: Mini MiII 1-ROW WAFER ASS'Y (Sn) SHORT ARM LOCK TYPE

molex MOLEX INCORPORATED

MATERIAL NO.: SEE CHART | DRAWING NO.: SD-55447-012 | SHEET NO.: 2

SIZE: B

THIS DRAWING CONTAINS INFORMATION THAT IS PROPRIETARY TO MOLEX INCORPORATED AND SHOULD NOT BE USED WITHOUT WRITTEN PERMISSION.

EN-02J(097) MXJ-54

55447012.S02