DRAWING MADE IN THIRD ANGLE PROJECTION
THIS DRAWING IS UNPUBLISHED. RELEASED FOR PUBLICATION ,19 .
© COPYRIGHT 19 BY AMP INCORPORATED. ALL INTERNATIONAL RIGHTS RESERVED.

LOC	DIST
AD	40

			REVISIONS		
P	F	ZONE	LTR	DESCRIPTION	DATE	APPD
			C	OBSOLETE PER AD6740	2/3/93	BF
			D	REL -8,1-0,1-6,2-4,-9 PER PPR	2/3/93	BF
			E	REL -5,1-3 PER PPR	2/3/93	BF
			F	REV PER 0010-0516-92 & 0010-0250-92	2/3/93	BF
			G	REV PER 0010-0525-94 JK	4-23-94	AG
			H	REV PER 0010-0928-94 JK	6-27-94	AG

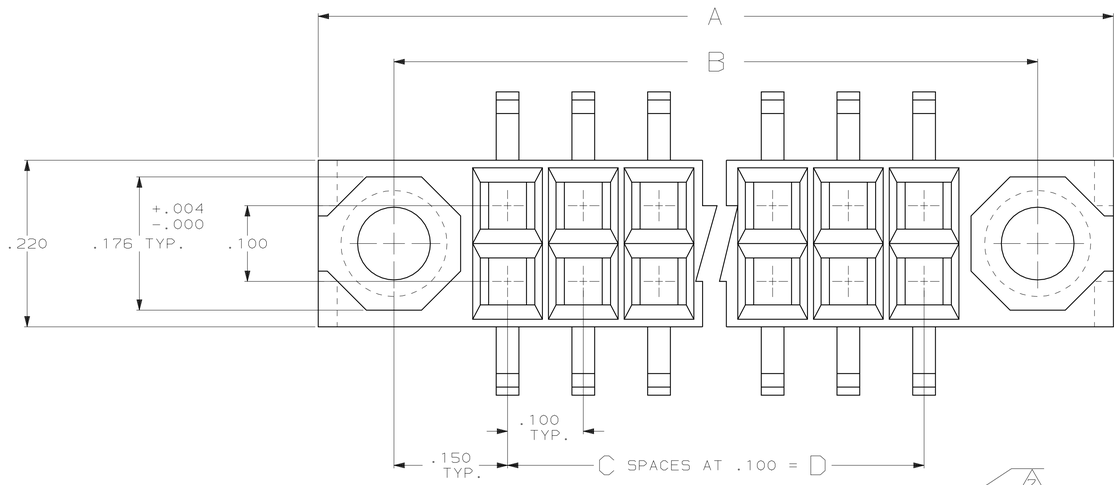

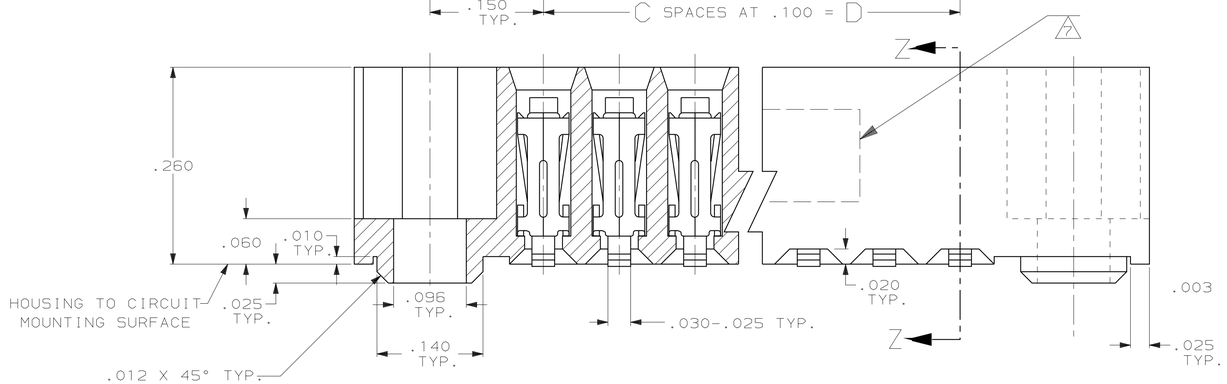

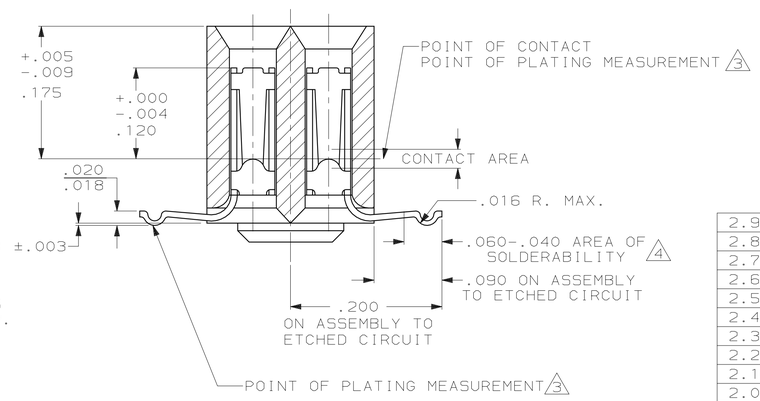

SECTION Z-Z

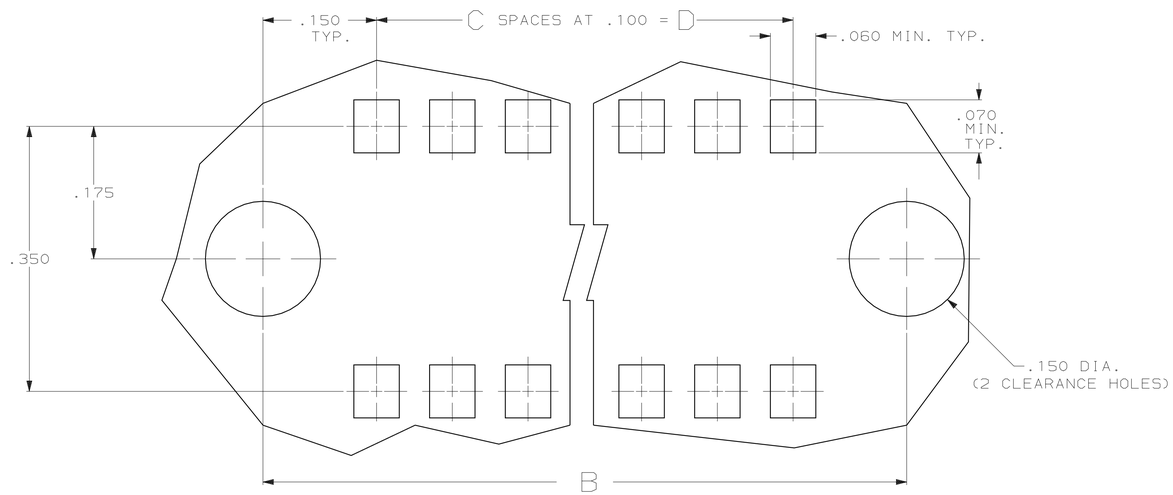

RECOMMENDED ETCHED CIRCUIT LAYOUT

DIMENSIONS & TOLERANCES IN ACCORDANCE WITH ANSI/IPC-D-300G , TYPE 1 , CLASS C

1. HOUSING MATERIAL : THERMOPLASTIC , RYTON R4 POLYPHENYLENE SULFIDE , PER MIL-M-24519 , TYPE GST-T40F .
2. CONTACT MATERIAL : PHOSPHOR BRONZE , TEMPER HARD ,PER QQ-B-750 , COMPOSITION : A .
3. CONTACT FINISH:.000050 GOLD MIN. PER MIL-G-45204 ,TYPE II , CLASS O , GRADE C , IN CONTACT AREA ONLY OVER .000050 MIN. NICKEL UNDERPLATE ALL OVER PER QQ-N-290 , CLASS 1 , GRADE N/A , GOLD FLASH OVER BALANCE OF CONTACT BOX STRUCTURE . .000300 MIN . REFLOWED TIN-LEAD ON SOLDER LEAD , PER MIL-P-81728 .
4. SOLDER LEAD FOOT FORM MUST PASS SOLDERABILTY PER MIL-STD-202 , METHOD 208 E .
6. THIS DRAWING IS RESTRICTED TO ROCKWELL CORPORATION.
7. "AMP", "CSA", DATE CODE AND PART NUMBER MARKED IN WHITE WITH .062±.015 HIGH CHARACTERS WHERE SIZE PERMITS. THE ORDER AND LOCATION IS OPTIONAL.

	D	C	B	A	POSITIONS	PART NO
	2.900	29	3.200	3.400	60	-
	2.800	28	3.100	3.300	58	-
	2.700	27	3.000	3.200	56	2-534284-4
	2.600	26	2.900	3.100	54	-
	2.500	25	2.800	3.000	52	-
	2.400	24	2.700	2.900	50	-
	2.300	23	2.600	2.800	48	-
	2.200	22	2.500	2.700	46	-
	2.100	21	2.400	2.600	44	-
	2.000	20	2.300	2.500	42	-
	1.900	19	2.200	2.400	40	1-534284-6
	1.800	18	2.100	2.300	38	-
OBSOLETE	1.700	17	2.000	2.200	36	1-534284-4
	1.600	16	1.900	2.100	34	1-534284-3
	1.500	15	1.800	2.000	32	-
OBSOLETE	1.400	14	1.700	1.900	30	1-534284-1
	1.300	13	1.600	1.800	28	1-534284-0
	1.200	12	1.500	1.700	26	534284-9
	1.100	11	1.400	1.600	24	534284-8
	1.000	10	1.300	1.500	22	-
OBSOLETE	.900	9	1.200	1.400	20	534284-6
	.800	8	1.100	1.300	18	534284-5
OBSOLETE	.700	7	1.000	1.200	16	534284-4
	.600	6	.900	1.100	14	-
OBSOLETE	.500	5	.800	1.000	12	534284-2
	.400	4	.700	.900	10	-

DO NOT SCALE PRINT.
UNLESS SPECIFIED
DIMENSIONS IN mm [INCHES]
TOLERANCES ON :
2 PLC DEC ± -
3 PLC DEC ± .005
ANGLES ± -

MATERIAL 1 2

FINISH 3

DR 2/3/93 J MOSER
CHK 2/3/93 B FLINCHBAUGH
APPD 2/3/93 B FLINCHBAUGH
APPD 2/3/93 B FLINCHBAUGH
PRODUCT SPEC -
APPLICATION SPEC -
WEIGHT -

AMP Incorporated
Harrisburg, PA 17105-3608

NAME
RECEPTACLE ASSEMBLY, SURFACE MOUNT
.100 X .100 ℄ WITH TOP ENTRY,
.260 HIGH HOUSING, MOD IV, AMPMODU

SIZE	CAGE CODE	DRAWING NO	
D	00779	C- 534284	
SCALE 10:			SHEET 1 OF 1

NOT the LATEST REVISION

THIS DRAWING IS A CONTROLLED DOCUMENT FOR AMP INCORPORATED. IT IS SUBJECT TO CHANGE AND THE CONTROLLING ENGINEERING ORGANIZATION SHOULD BE CONTACTED FOR THE LATEST REVISION.

RESTRICTED CUSTOMER DRAWING