THIS DRAWING IS UNPUBLISHED. RELEASED FOR PUBLICATION -,- .
© COPYRIGHT - By - ALL RIGHTS RESERVED.

LOC	DIST
FB	00

REVISIONS

P	LTR	DESCRIPTION	DATE	DWN	APVD
	A1	REVISED PER ECO-11-005033	28MAR11	RK	HMR

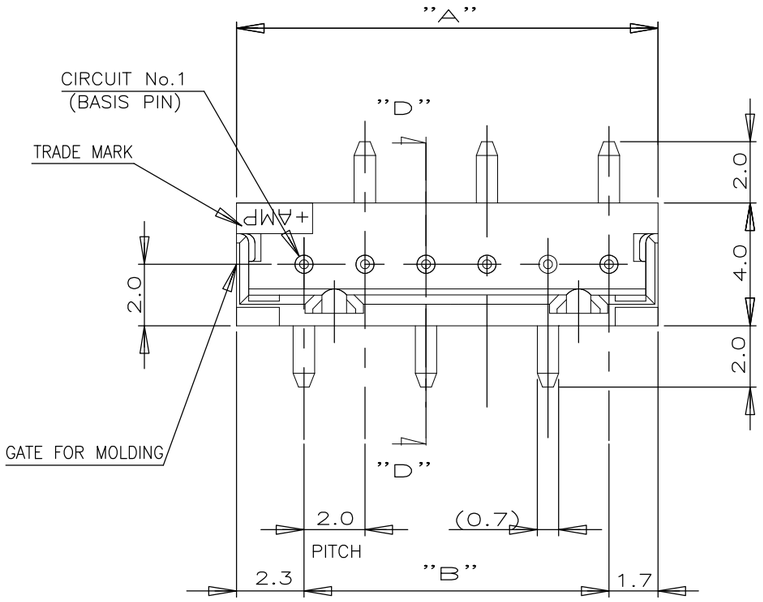

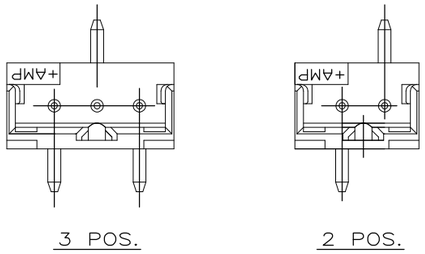

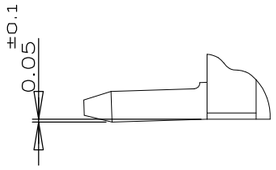

DETAIL E
SCALE 10-1

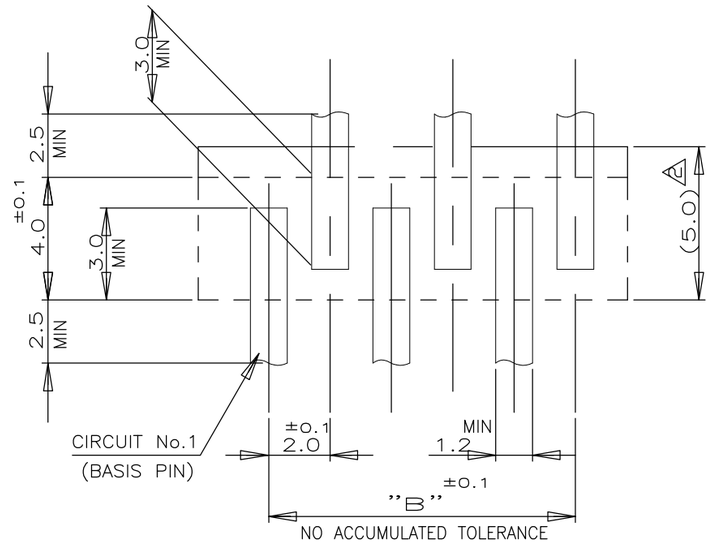

RECOMENOED P.C.BOARD LAYOUT
(P.C.B THK:0.8mm MIN)

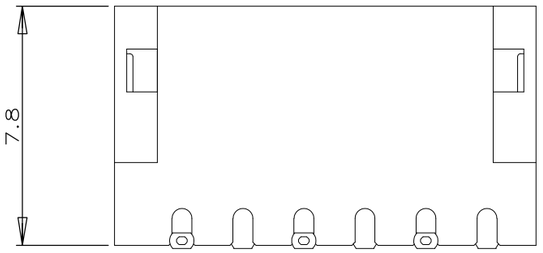

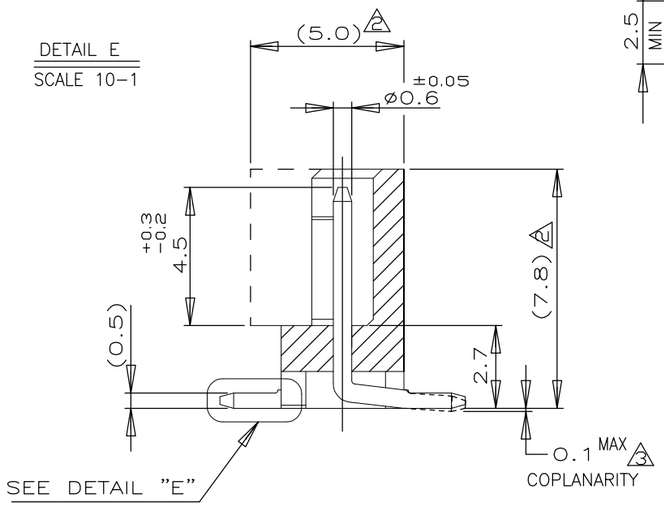

SECT. "D"-"D"

QTY'S/TUBE	"A"	"B"	Pos.	NATURAL	BLACK
				P/N	
20	20.0	16.0	9	6-292172-9	292172-9
25	18.0	14.0	8	6- -8	-8
30	16.0	12.0	7	6- -7	-7
30	14.0	10.0	6	6- -6	-6
40	12.0	8.0	5	6- -5	-5
45	10.0	6.0	4	6- -4	-4
60	8.0	4.0	3	6- -3	-3
80	6.0	2.0	2	6-292172-2	292172-2

NOTES;

1. MATERIAL : HOUSING - 6T PA G.F.30% (UL94V-0)
   COLOR BLACK OR NATURAL
   POST - TIN BRASS
2. OCCUPANT AREA ON PC BOARD (AFTER CONNECTOR MATING)
3. TO BE MEASURED WITH CONNECTOR PLACED ON HORIZONTAL DATUM SURFACE,FLOAT OF SOLDER TINE FROM DATUM SURFACE IS 0.1mm MAX
4. PART NUMBER FOR TUBE: 8-720999-6
5. PRODUCT MUST COME OUT SMOOTHLY FROM TUBE AT INCLINING THE TUBE TO 45 °

TOLERANCES UNLESS OTHERWISE SPECIFIED:
10>* : ±0.2
30>*>10 : ±0.25
100>*>30 : ±0.3
ANGEL : ±3°

THIS DRAWING IS A CONTROLLED DOCUMENT.

DIMENSIONS: mm

TOLERANCES UNLESS OTHERWISE SPECIFIED:
0 PLC ±-
1 PLC ±-
2 PLC ±-
3 PLC ±-
4 PLC ±-
ANGLES ±-

MATERIAL | FINISH

DWN	J.JIANG	23JAN03
CHK	S.YAO	23JAN03
APVD	T.SASAKI	23JAN03
PRODUCT SPEC	108-60016	
APPLICATION SPEC		
WEIGHT		

TE Connectivity

NAME
TUBE PACKING AMP CT CONN
POST HDR ASS'Y (STD-V SMT) W/O BOSS
-

SIZE	CAGE CODE	DRAWING NO	RESTRICTED TO
A3	00779	C-292172	-

CUSTOMER DRAWING | SCALE NTS | SHEET 1 OF 1 | REV A1