THIS DRAWING IS UNPUBLISHED. RELEASED FOR PUBLICATION 2011
© COPYRIGHT 2011 - ALL RIGHTS RESERVED.

| LOC | DIST |
|---|---|
| AI | - |

REVISIONS

| P | LTR | DESCRIPTION | DATE | DWN | APVD |
|---|---|---|---|---|---|
| | B | REVISED PER ECO-12-005569 | 22MAR2012 | HRY | MS |

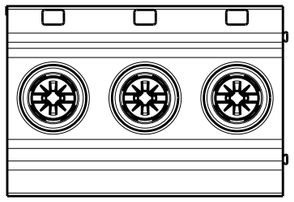

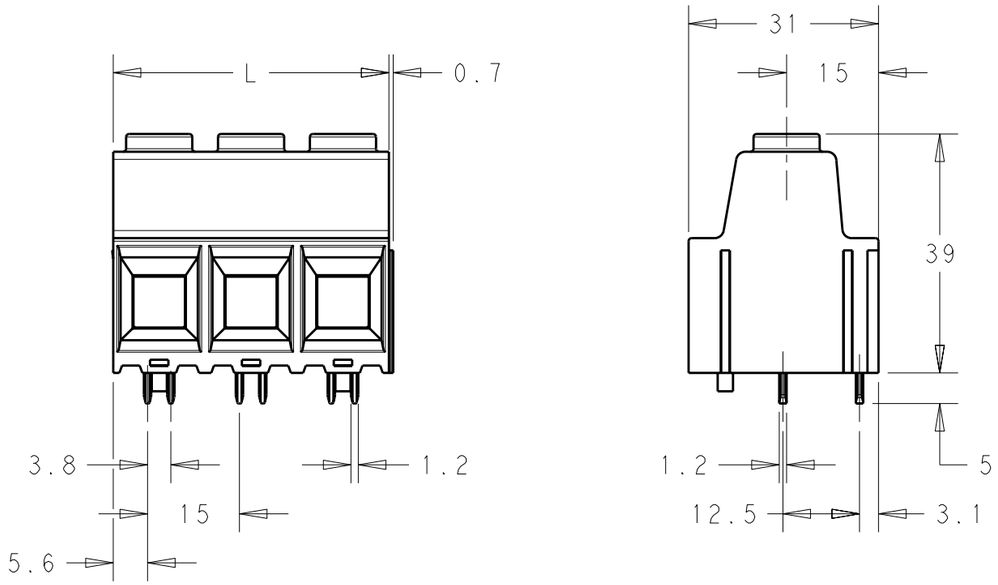


MATERIALS:
HOUSING-POLYAMIDE, COLOR-GREEN
SCREW- M5,NICKEL PLATED STEEL.
CLAMP- TIN PLATED STEEL.
PIN-TIN OVER NICKEL PLATED COPPER ALLOY.

MECHANICAL:
PCB THICKNESS-2.40 MAX
PCB HOLE DIAMETER-1.60 MIN
STRIP LENGTH-18 MM
OPERATING TEMPERATURE--40°C TO +110°C
TORQUE-2.1~2.5 Nm.

ELECTRICAL:
WIRE RANGE- 20 TO 1 AWG
VOLTAGE RATING- 600 VOLTS
CURRENT RATING-130 AMP FIELD WIRING; 135 AMP FACTORY WIRING
CONTACT RESISTANCE-15 MILLOHM MAX
INSULATION RESISTANCE-$10^9$ OHMS MIN (500V DC)

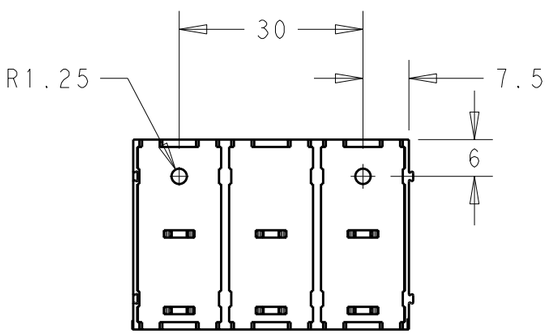


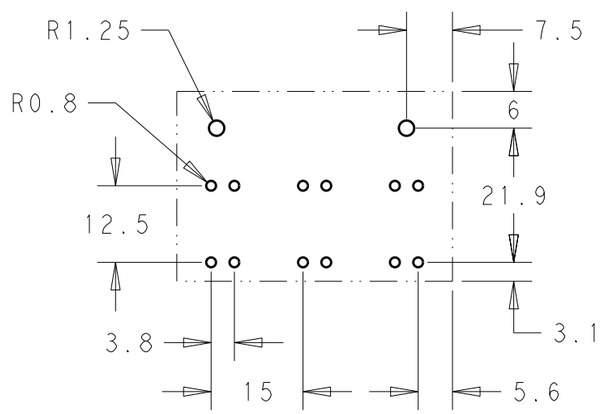


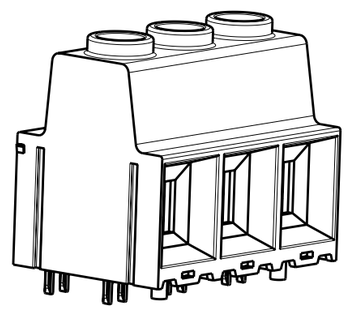

SCALE 1:1
-3 AS SHOWN

| DIM L | POLE | PART NUMBER |
|---|---|---|
| 180.00 | 12 | 1-1986714-2 |
| 165.00 | 11 | 1-1986714-1 |
| 150.00 | 10 | 1-1986714-0 |
| 135.00 | 9 | 1986714-9 |
| 120.00 | 8 | 1986714-8 |
| 105.00 | 7 | 1986714-7 |
| 90.00 | 6 | 1986714-6 |
| 75.00 | 5 | 1986714-5 |
| 60.00 | 4 | 1986714-4 |
| 45.00 | 3 | 1986714-3 |
| 30.00 | 2 | 1986714-2 |

THIS DRAWING IS A CONTROLLED DOCUMENT.

DIMENSIONS: mm

TOLERANCES UNLESS OTHERWISE SPECIFIED:
0 PLC ±-
1 PLC ±0.40
2 PLC ±0.20
3 PLC ±-
4 PLC ±-
ANGLES ±1°

MATERIAL -
FINISH -

DWN RAGHAVENDRA 05SEP2011
CHK SARVER MICHAEL 05SEP2011
APVD SARVER MICHAEL 05SEP2011
PRODUCT SPEC -
APPLICATION SPEC -
WEIGHT -

TE Connectivity

NAME POWER TERMINAL BLOCK, SOLDERABLE UP TO 275DEG C DOUBLE PIN MODULAR 02 - 12 POLES PITCH 15.00mm WITH PEG

| SIZE | CAGE CODE | DRAWING NO | RESTRICTED TO |
|---|---|---|---|
| A3 | 00779 | C-1986714 | - |

CUSTOMER DRAWING
SCALE 1:1 SHEET 1 OF 1 REV B

1470-19 (3/11)

Pro/ENGINEER DRAWING