CW INDUSTRIES

TORQ-TITE™

IDC CONNECTOR SYSTEM

APPROVED QPL MIL-DTL-83513

CW INDUSTRIES

Completely American Made

Catalog C-2110-84
Rev. A-01

About CW

Our history dates from the earliest days of electronics.

The Wirt Company was founded in 1904 by Charles Wirt, an associate of Thomas Alva Edison. Wirt pioneered the development of wirewound potentiometers, fixed wirewound resistors, automotive spark suppressors and slide switches. At the same time, engineers at Continental Carbon, Inc., were creating basic processes for manufacturing carbon composition resistors, pyrolytic metal film resistors and carbon film resistors. Following their merger, Continental Carbon, Inc. and The Wirt Company became Continental-Wirt Electronics Corporation and more recently, CW Industries. As CW Industries, we have developed patented products and processes for several segments of the electronics industry. These products include slide, rocker and pushbutton switches; insulation displacement connectors; and a variety of custom products.

Our fully integrated manufacturing facilities permit us to control the conversion of raw materials to finished product. In addition to engineering each of our basic designs and patented features, we have the capabilities to mold, stamp and plate in-house virtually every component used in each of our products. We design and build our own molds and contact dies, as well as most of our assembly equipment. We even have an environmental testing laboratory qualified by Defense Electronics Supply Center and Underwriters Laboratories to perform in-plant testing.

These facilities, plus our experience in making millions of terminations over the past years, uniquely qualify us to provide you with fully tested Insulation Displacement Connectors with a significant improvement in design, reliability, delivery and overall cost.

Our technical staff and local value-added assembly centers are available to provide application engineering assistance. We can provide 100% tested, ready-to-use cable assemblies made to your specifications... or connectors, cable and assembly tools for your in-house assembly.

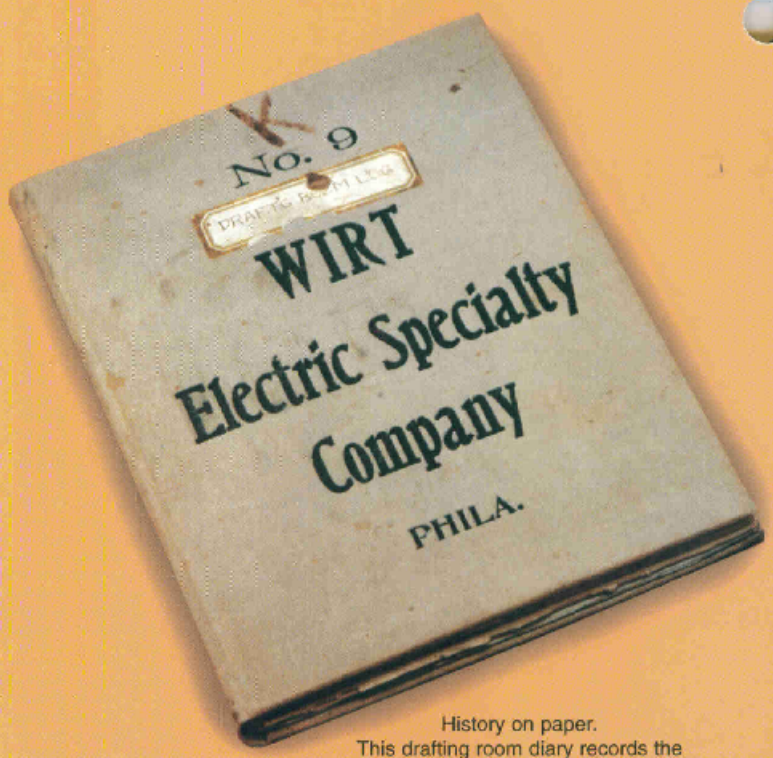

History on paper.
This drafting room diary records the engineering department activities of the Wirt Company in the year 1912.

ISO 9001 CERTIFIED

CW INDUSTRIES • 130 James Way, Southampton, PA 18966 - 3838 • Telephone: (215) 355-7080 • Fax: (215) 355-1088 • www.cwind.com

About CW Insulation Displacement Connectors

CW mass terminated Insulation Displacement Connectors are specifically designed to provide a highly reliable long term, gas-tight connection at every position. In addition to our patented Torq-Tite™ contact, other significant design advantages include ruggedness of construction, ease of assembly, integral strain relief options, choice of contact materials and plating finishes. The complete series of DIP, PCB, Socket and Header, Card Edge and D-Subminiature Connectors meets applicable Military Specifications, and offers direct interchangeability with other industry standard Insulation Displacement Connectors.

CW connectors are designed not only for reliability, but also for ease of use in many applications. Simple assembly tools can be used to terminate CW connectors to cable, since preassembled covers and built-in guides on each connector orient cable conductors to contact tines. Cover types for strain relief, daisy-chaining, or cable end protection are available. Light or heavy gold over nickel plated contacts or tin-lead plated contacts are available to suit specific applications.

All elements of the CW connector system are available through a nation-wide network of stocking distributors and value-added assembly centers. They have on hand a comprehensive inventory of all types of flat cable and connectors for fast delivery of connectors or 100% pre-tested, ready to use assemblies made to your specifications.

The connectors in this catalog are covered by one or more of United States patents 3,993,393 and 4,348,073 and 3,858,159 and 3,850,840 and by pending U.S. patent applications. Corresponding foreign patents and pending applications also apply.

Table of Contents

About CW . . . . . Inside front cover

About CW Insulation Displacement Connectors . . . . . Page 1

Selection Criteria for IDC's . . . . . Pages 2, 3

Selection Guide, Connectors and Cable . . . . . Pages 4, 5

Socket
- Design Features . . . . . Pages 6, 7
- Specifications and Dimensions . . . . . Pages 8, 9

Header
- Design Features . . . . . Pages 10, 11
- Specifications and Dimensions . . . . . Pages 12, 13
- Fully Shrouded Header . . . . . Pages 14, 15
- Low Profile Box Header . . . . . Pages 16, 17

D-Subminiature
- All Plastic "D" Design Features . . . . . Pages 18, 19
- All Plastic "D" Specifications and Dimensions . . . . . Pages 20, 21
- Metal Faced "D" and EMI/RFI Shield Design Features . . . . . Pages 22, 23
- Metal Faced "D" and EMI/RFI Shield Specifications and Dimensions . . . . . Pages 24, 25

Card Edge
- Design Features . . . . . Pages 26, 27
- Specifications and Dimensions . . . . . Pages 28, 29

DIP
- Design Features . . . . . Pages 30, 31
- Specifications and Dimensions . . . . . Pages 32, 33

PCB
- Design Features . . . . . Pages 34, 35
- Specifications and Dimensions . . . . . Pages 36, 37

Flat Cable
- Extruded Gray . . . . . Page 38
- Color-Coded Cable . . . . . Page 39

Assembly Tools . . . . . Page 40

Significance of Mil-DTL-83503 and Mil-DTL-24308 Approvals . . . . . Page 41

Part Number Index . . . . . Page 42

Notes . . . . . Page 43, 44

Other CW Industries Products . . . . . Inside back cover

Selection Criteria for IDCs

Selection decisions on Insulation Displacement Connectors (IDCs) present opportunities for significant improvements in quality, interchangeability, and cost-effective handling and assembly. The connectors selected will impact significantly on the overall reliability and usefulness of the final system. Here are the important considerations in the selection of IDC components:

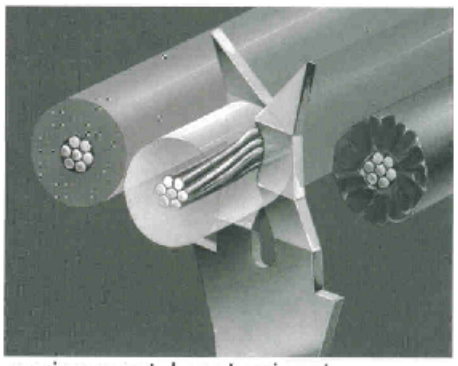

The Electrical Contacts

Contact integrity must be maintained in two places–between the contact and the cable conductor and between the contact and its mate...whether it be a PC board, a pin or a socket. There can be no compromise on either end.

A properly designed contact will completely displace the insulation, and provide clean metal-to-metal contact with the conductor, insuring a long-term, gas-tight connection.

One end of our patented IDC contact consists of a pair of offset tines. When forced through the insulation, they slide along the conductor, compressing it and gripping it to form a gas-tight connection. The conductor is compressed by dual force. As the cable conductor is wedged into the contact's insulation displacement slot, the wiping action of the tines cleans the conductor surface and the conductor is compressed. In addition to the compression force, a second force is created by the offset tines. The resultant torque produces a long-term, Torq-Tite™ connection, impervious to environmental contaminants.

The electrical connection on the other end–between the contact and its mate–whether it be a PC board, a pin or a socket, is of equal importance. Here structural design, materials, area of contact, surface finish, contact redundancy, and mechanical means of seating the contact in the insulator can be critical. Every CW contact has been designed with full consideration of each of these factors.

The Insulator

The excellent electrical insulating characteristics of IDCs, their physical ruggedness, ability to withstand extremes of environmental conditions, and ease of assembly are the result of careful and detailed material testing and selection as well as insulator design. Where the connector is exposed to soldering, the insulator must be resistant to dissolution by solder, fluxes and PC board washes. The material should be rugged enough to be handled without breaking or chipping and strong enough to hold the contacts firmly in place. It should be chemically-inert and have dielectric properties consistent with the application requirements. These are the criteria considered in selecting materials for all CW insulators.

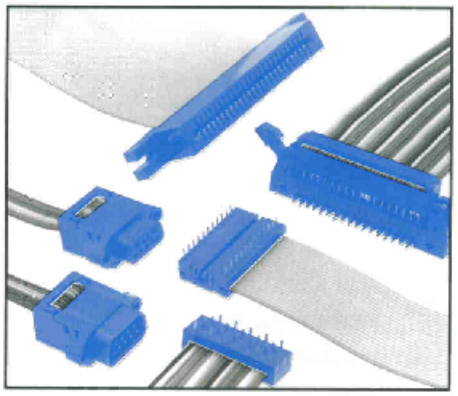

Mating and Interchangeability

An important consideration in the design and development of every CW connector is compatibility and mateability with connectors of other manufacturers.

The problem of connecting a PCB, DIP or Card Edge connector to a printed circuit board are not as serious as mating a "socket" to a "header" or a "socket" D-Subminiature to a "pin" D-Subminiature, when connectors from different manufacturers are used. CW connector designs, in almost every instance, minimize electrical or mechanical mismatches resulting from mating connectors of various manufacturers. Our designs permit dual sourcing of almost all elements. To this end, CW has worked closely with the US Defense Electronic Supply Center in the development of industry standards and specifications as defined in Mil-DTL-83503. CW IDC connector products are qualified to applicable Mil-DTL-83503 standards and are interchangeable and mateable with other connectors so qualified.

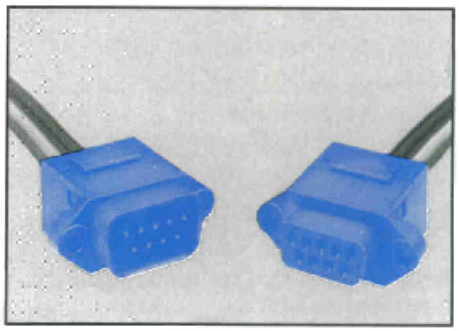

Polarization and Contact Identification

Where there are so many electrical circuit connection possibilities, contact identification is desirable. CW includes numbered contacts on most connectors.

An inherent part of the CW system is a positive means of polarizing mating pairs of IDCs, or positively orienting the connector to the PC board, thereby preventing cross wiring and possible equipment damage.

Standardization is attained by using polarization and identification methods consistent with Mil-DTL-83503 specifications.

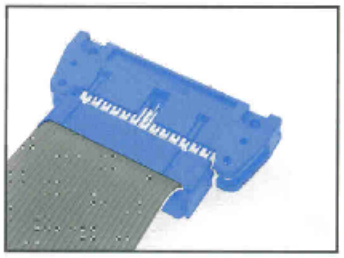

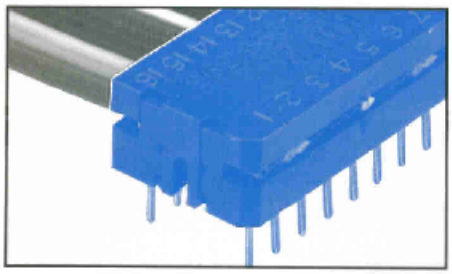

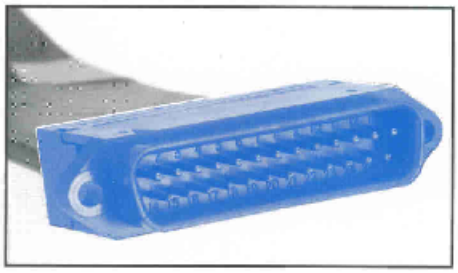

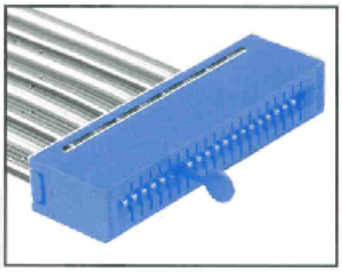

Strain Relief

Test the strength of your cable and connector by pull a test. In Torq-Tite™ D-Subminiature and Card Edge Connectors, strain reliefs are "built-in." In DIPs, PCBs and Sockets, you may require an optional strain relief for additional protection. CW's strain relief designs effectively isolate the connection of cable-to-contact from mechanical strain even if the cable is pulled or yanked. CW strain reliefs require limited space, are easy to apply, are available in several options for alternate cable orientation, and are capable of withstanding a minimum pull-off force of 8 ounces per contact, consistent with Mil-DTL-83503 standards.

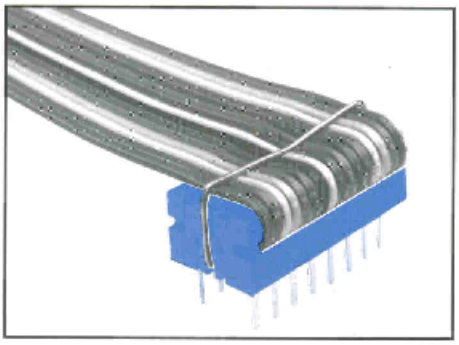

Reusable Cover

The ability to remove the connector cover without breakage is often desirable. Most CW designs make it possible to easily, safely and non-destructively remove the cover that protects the connection. The connector, and often the cover itself, are *reusable*.

Ease of Assembly

Assembly is often performed by unskilled personnel seeking to achieve more speed than precision. Therefore, the key element of cable alignment should not depend on a high degree of operator skill. CW's simple assembly method reduces time and cost, and produces reliable connectors with contacts firmly and precisely seated in the connector bases. Factory preassembled covers and built-in cable guides are featured on most connectors. Complex assembly tools are not required. With CW's assembly press, a simple lower die holds the connector in place while a parallel force applied to the cover terminates each IDC contact to the corresponding conductor in the flat cable and locks the cover in place.

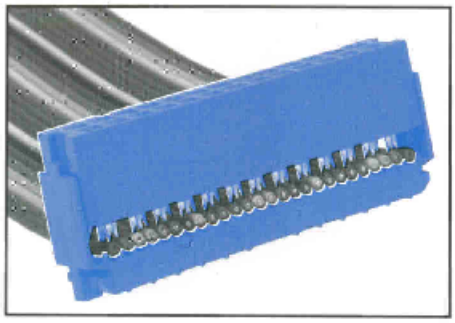

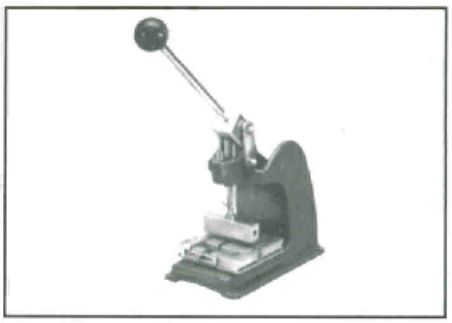

CW Insulation Displacement Connectors:

	Description	Features
	Socket Normally used to interconnect PC boards or points on a backplane through headers or pins on .100 in. x .100 in. spacing. Advanced design includes patented Torq-Tite™ contact for positive gas-tight cable termination. Nose end of contact provides superior wiping action and redundant electrical contact. Qualified per U.S. Defense Department to Mil-DTL-83503/7 and interchangeable and mateable with other connectors so qualified.	• Mil-DTL-83503/7 approved • Preassembled cover provides for precise, rapid assembly • Ridges on cover help align cable • Reusable contact and cover design • Choice of polarizing method and optional strain relief strap
	Headers Fully shrouded, 3 wall and low profile box headers are available to provide a reliable mating interface for standard sockets having .100 in. x .100 in. contact spacing. Headers have pins on their mating side and offer the designer a choice of either wire-wrap or solder pins in various lengths on the opposing end in straight or right angle styles. Qualified per U.S. Defense Department to Mil-DTL-83503/20, 21, 24 and 25.	• Mil-DTL-83503/20, 21, 24 and 25 approved • Mateable with sockets from other manufacturers, with or without strain relief • Patented polarization design consistent with Mil-DTL-83503 standards–integral ribs eliminate need for gluing polarizing keys to the header base • Polarization ribs can be removed for use with non-polarized sockets • Easy ejection, and secure locking available with long or short latches
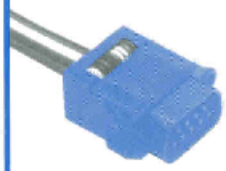	D-Subminiature Ideal for input/output applications and interconnecting electronic equipment. Connectors are UL recognized and CSA listed and are designed to meet the applicable standards of Mil-DTL-24308. They are interchangeable and mateable with other connectors that meet these standards. Available in all-plastic or metal-face versions with optional EMI/RFI shield.	• Choice of 3-way strain relief • Accepts standard .050 in. conductor spacing cable without special cable preparation • Preassembled cover provides for precise, rapid assembly • Accepts jacketed and shielded cable without the need for a backshell • Patented contact design provides for precise mating with our D-Subminiature connectors • Metal Face and shield provide EMI/RFI shielding
	Card Edge Provides a fast means for connecting/disconnecting single, double-sided or multi-layer PC boards. Extra long cantilevered contact provides an extended self-cleaning, wiping action, and ensures positive connection to the board. Good contact pressure is maintained with minimal wear on PC board pads.	• Factory pre-assembled cover provides for fast assembly • Self-adjusting contact force adjusts for variations in PC board thickness • Long cantilever contact provides consistent insertion/withdrawal forces • Full polarization capability • Reusable contact and cover design
	DIP Used for rapid, permanent connection of ribbon cable to a PC board or when connect/disconnect capabilities are required. Mates with a standard DIP socket. Cover is factory preassembled to connector base to simplify handling and assembly of cable. Qualified per U.S. Defense Department to Mil-DTL-83503/6.	• Mil-DTL-83503/6 approved • Sturdy, yet flexible terminal posts • No "bare shoulders" on the contact at the PC board interface • Preassembled cover minimizes assembly time • Optional strain relief strap is available
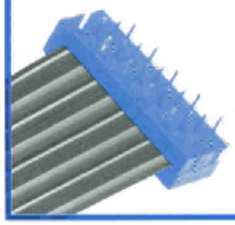	PCB Used when a permanent connection of flat cable to the PC board is required. Cable is terminated to the PCB plug to make a reliable gas-tight connection through use of Torq-Tite™ contacts. The connector's pins are then soldered to the board. Qualified per U.S. Defense Department to Mil-DTL-83503/23.	• Mil-DTL-83503/23 approved • Sturdy, yet flexible solder posts able to withstand bending and straightening • No "bare shoulders" on the contact at the PC board interface • Integral strain-relief option available • Cover lip available for cable end termination

No. of Conductors	Pages	Standards and Specifications
10, 14, 16, 20, 26, 34, 40, 50, 60	6, 7 8, 9	• Contacts: phosphor bronze, standard. • Contact Plating: 30 µ in. gold over 50 µ in. nickel, standard* 10 µ in. gold over 50 µ in. nickel optional* 50 µ in. gold over 50 µ in. nickel, optional 100 µ in. tin-lead optional* 200 µ in. tin-lead optional*
10, 14, 16, 20, 26, 34, 40, 50, 60	10, 11 12, 13 14, 15 16, 17	• Housing Material UL 94V-0 flame-retardant thermoplastic • Color: blue
9, 15, 25, 37 with pin or socket contacts	18, 19 20, 21 22, 23 24, 25	• Operating Temperature: -55° to +125°C • Current Rating: 1 amp (maximum) per contact • Dielectric Withstand Voltage: greater than 500 Vdc at sea level
10, 20, 26, 34, 40, 50	26, 27 28, 29	• Insulation Resistance: greater than $5x10^9$ ohms • Standard Contact Resistance 15 milliohms max.
14, 16 24, 40	30, 31 32, 33	* Tin-lead plating not available on header connectors. 10 µ in. gold over 50 µ in. nickel is standard contact plating on DIP connectors. 100 µ in. tin-lead is standard contact plating on PCB connectors.
10, 20, 26, 34, 40, 50, 60	34, 35 36, 37	

	Flat Cable Guide	Page
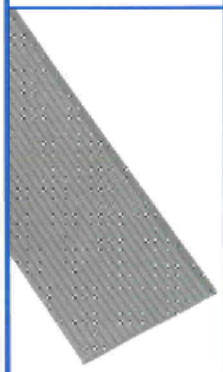	Gray 28 AWG (7/36) .050 in. conductor spacing No. Conductors: 9, 10, 14, 15, 16, 20, 24, 25, 26, 34, 37, 40, 50, 60 • Extruded, mirror image design • UL Style 2651	38
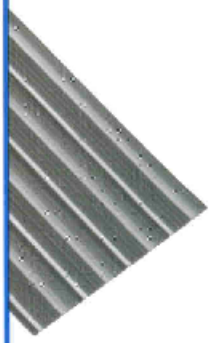	Color-coded 28 AWG (7/36) .050 in. conductor spacing No. Conductors: 9, 10, 14, 15, 16, 20, 24, 25, 26, 34, 37, 40, 50, 60 • Bonded • Thinner Bonded Cable–only .035 in. thick	39

Socket Connectors

Socket connectors are typically used to interconnect PC boards or points on a backplane through headers or pins on .100 in. x .100 in. spacing.

They feature an advanced mechanical design which includes CW's patented offset-tine (Torq-Tite™) contact for positive gas-tight cable termination. The nose end of the contact provides a long, dual cantilever for a longer wiping action and improved self-cleaning of the mating pin. The extra length also results in a longer and more reliable working life.

The preassembled cover design allows fast, reliable assembly to extruded, bonded or laminated cable and features built-in cable alignment. These features permit the use of simplified termination equipment.

CW's socket connectors meet Mil-DTL-83503/7 specifications and are listed on the U.S. Defense Department's Qualified Products List.

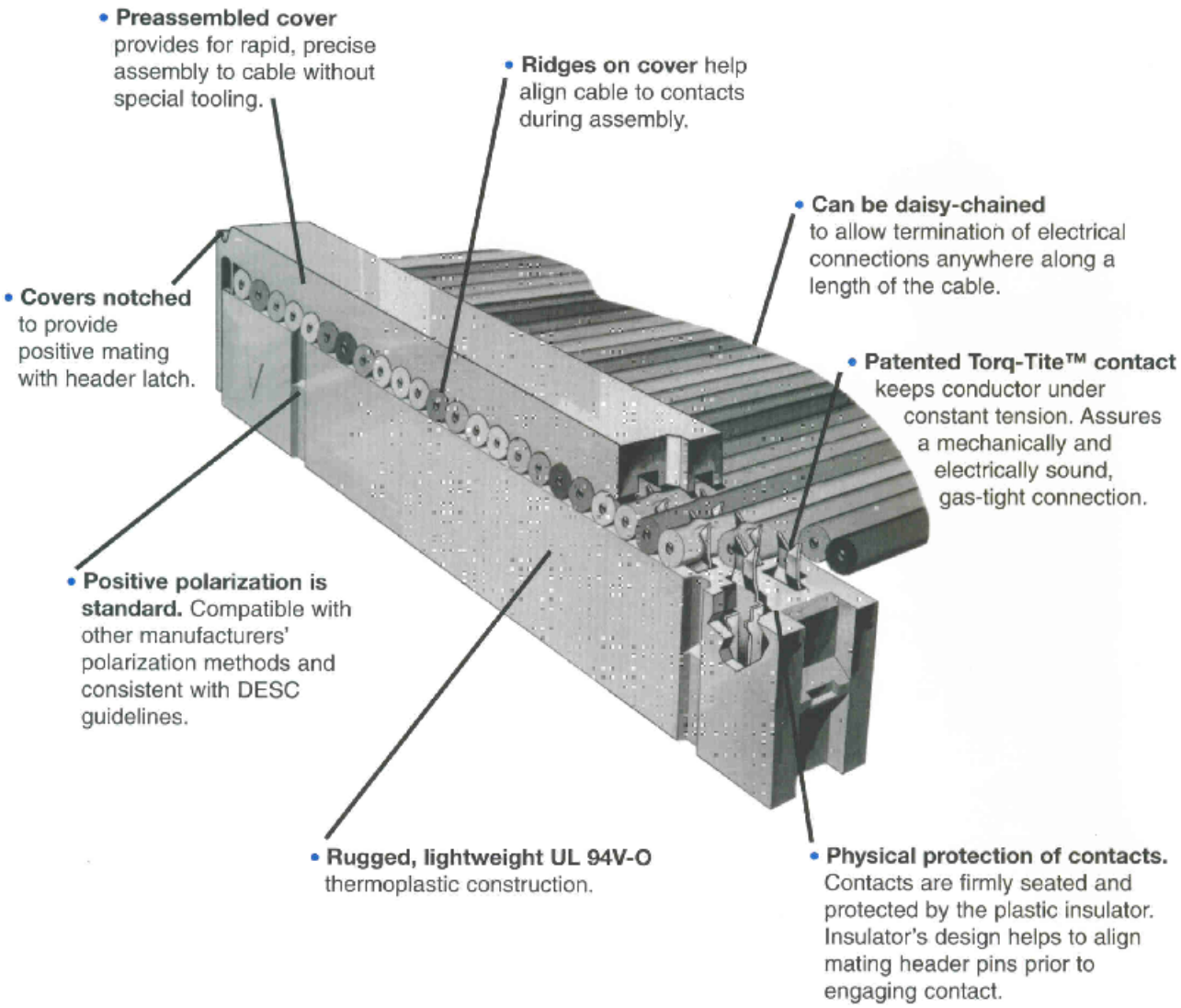

CW INDUSTRIES • 130 James Way, Southampton, PA 18966 - 3838 • Telephone: (215) 355-7080 • Fax: (215) 355-1088 • www.cwind.com

Contact

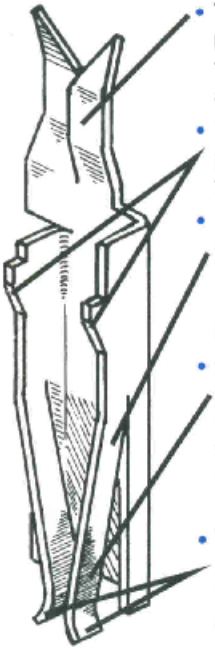

- **Torq-Tite™ offset tines** place conductor under tension. Reactive forces assure gas tightness
- **Double barbs bite into plastic,** retaining contact firmly in insulator.
- **Long cantilever of contact leaves** provide less angular deflection during insertion/ withdrawal cycling.
- **Contact nose location** assures longer "wipe" on entering pin—to clean surfaces better and reduce electrical resistance.
- **Two contact leaves** insure integrity of contact, particularly under shock and vibration.

Socket Connector Features

- 10, 14, 16, 20, 26, 34, 40, 50, 60 contact versions.
- 30 μ in. gold (in mating area) over 50 μ in. nickel-plated phosphor bronze contacts standard: optional gold plating thicknesses or tin-lead plating also available.
- **Fully interchangeable with competitive sockets and headers.** Meets Mil-DTL-83503 specifications; mateable with standard headers having contacts on .100 in. centers.
- **Insulated metal strain relief cover.** Protects contacts from excessive strain on cable.
- **Optional polarizing key** available.
- **Molded covers can be readily removed** and connectors reused.
- Mil-DTL-83503 approved.

Socket Contact

All CW socket connectors incorporate our patented Torq-Tite™ contact for positive, gas-tight cable terminations. An extra long, dual-cantilevered contact on the mating end assures a reliable connection even under vibration. The contact's mating area is located near the face of the connector to provide a longer, self cleaning wipe on the corresponding header pins.

Strain Relief

With the CWR-210 series sockets, an insulated, metal strain relief strap provides increased protection from forces applied to the cable, consistent with the requirements of Mil-DTL-83503. The connector is designed with a recess in the molded cover to allow the bend in the cable to fall within the connector's profile. This feature permits closer connector spacing than is possible with socket connectors from other manufacturers.

Polarization

Choose your polarization method from one of three options:

Method I: Grooves in sockets CWR-210 and 220 match up with ribs on mating headers. (Mil-DTL-83503 approved method.)

Method II: Plastic key **(CWN-Key-1)** inserted into socket contact prevents mismating if corresponding header contact is removed.

Method III: In addition to mating socket grooves and header slots, central polarizing key on one socket side (CWR-217 and CWR-227) mates with matching central header slot.

Assembly

A factory preassembled cover eliminates the need for complicated assembly tooling. The connector cover aligns the cable to the contacts. The individual conductors are terminated by applying opposing parallel forces on the connector cover and base.

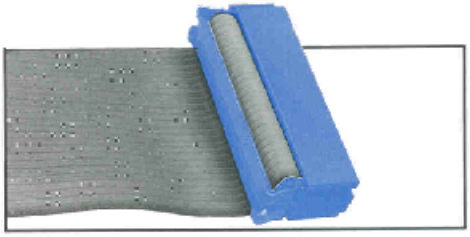

Method I

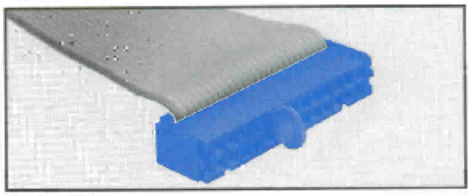

Method II

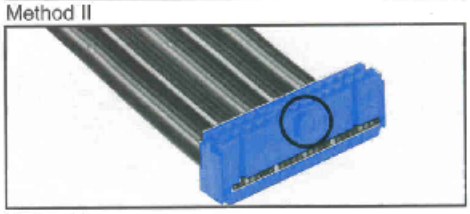

Method III

Engineering Dimensions

Dimensions

Socket Connector
with Metal Strain Relief Strap

CONNECTOR DIMENSIONS				
NO. CONTS.	A	B	C	D
10	.400 (10.16)	.515 (13.08)	.677 (17.20)	.690 (17.53)
14	.600 (15.24)	.715 (18.16)	.877 (22.28)	.890 (22.61)
16	.700 (17.78)	.815 (20.70)	.977 (24.82)	.990 (25.15)
20	.900 (22.86)	1.015 (25.78)	1.177 (29.90)	1.190 (30.23)
26	1.200 (30.48)	1.315 (33.40)	1.477 (37.52)	1.490 (37.85)
34	1.600 (40.64)	1.715 (43.56)	1.877 (47.68)	1.890 (48.01)
40	1.900 (48.26)	2.015 (51.18)	2.177 (55.30)	2.190 (55.63)
50	2.400 (60.96)	2.515 (63.88)	2.677 (68.00)	2.690 (68.33)
60	2.900 (73.66)	3.015 (76.58)	3.177 (80.70)	3.190 (81.03)

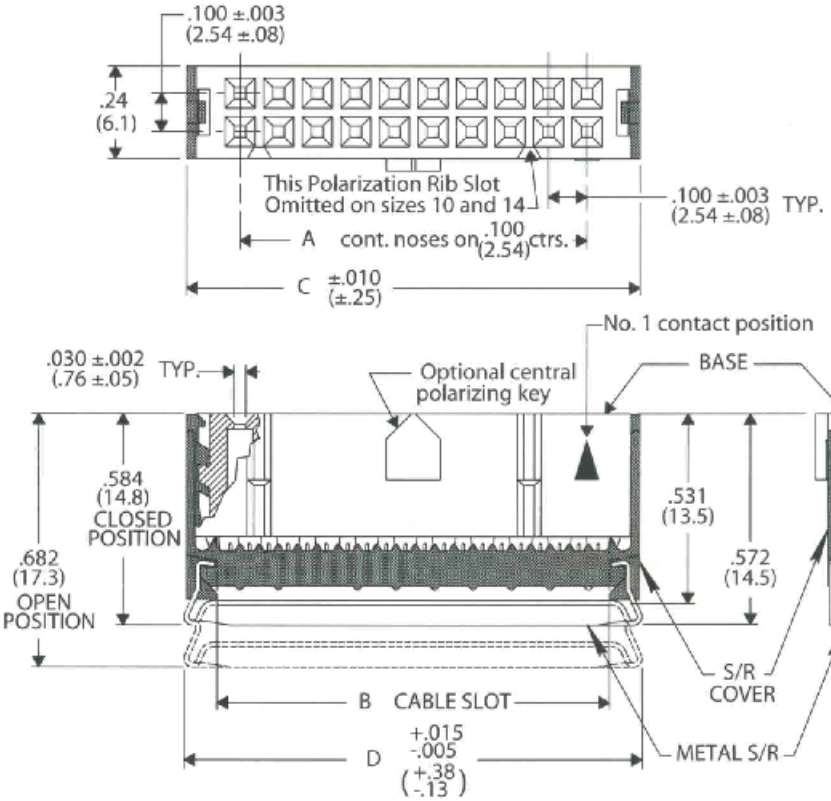

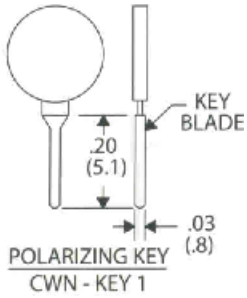

Socket Connector
with Non-Strain Relief Cover

CONNECTOR DIMENSIONS			
NO. CONTS.	A	B	C
10	.400 (10.16)	.515 (13.08)	.677 (17.20)
14	.600 (15.24)	.715 (18.16)	.877 (22.28)
16	.700 (17.78)	.815 (20.70)	.977 (24.82)
20	.900 (22.86)	1.015 (25.78)	1.177 (29.90)
26	1.200 (30.48)	1.315 (33.40)	1.477 (37.52)
34	1.600 (40.64)	1.715 (43.56)	1.877 (47.68)
40	1.900 (48.26)	2.015 (51.18)	2.177 (55.30)
50	2.400 (60.96)	2.515 (63.88)	2.677 (68.00)
60	2.900 (73.66)	3.015 (76.58)	3.177 (80.70)

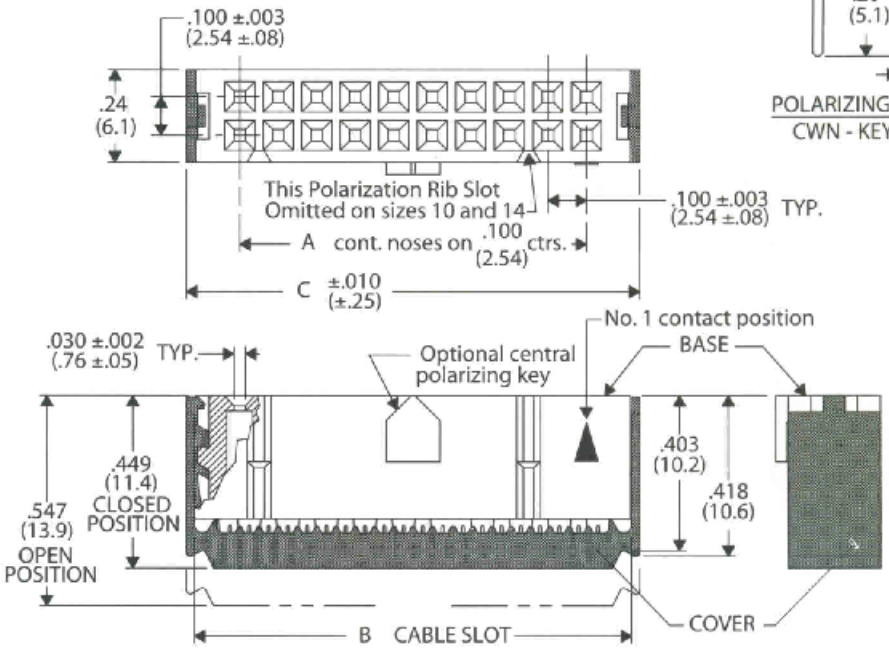

Specifications and Ordering Information

Specifications

- Contacts: phosphor bronze, standard.
- Contact Plating: 30µ in. gold (in mating area) over 50µ in. nickel, standard; 10µ in. gold (in mating area) over 50µ in. nickel, optional; 50µ in. gold (in mating area) over 50µ in. nickel, optional; 100µ in. 60/40 tin-lead optional.
- Insulator Material: UL 94V-O flame-retardant thermoplastic
- Strain Relief Strap Material: insulated stainless steel
- Color: blue
- Operating Temperature: -55ºC to +125ºC
- Current Rating: 1A (maximum) per contact
- Dielectric Withstand Voltage: greater than 500 Vdc at sea level
- Insulation Resistance: greater than $5x10^9$ ohms
- Withdrawal force 2-8 oz/contact, typical
- Cover pull-off force 8 oz/contact minimum (force along contacts' primary axes)

How to Order Socket Connectors

CWR-XXX-XX-00XX

Type of Connector
210=Socket connector with strain relief (standard)
220=Socket connector without strain relief (standard)
217=Socket connector with central polarizing key and strain relief
227=Socket connector with central polarizing key, but without strain relief.

Number of Contacts
(10, 14, 16, 20, 26, 34, 40, 50, or 60)

Plating
0021=30µ in. gold (in mating area) over 50µ in. nickel (standard)
0000=10µ in. gold (in mating area) over 50µ in. nickel
0022=50µ in. gold (in mating area) over 50µ in. nickel. Mil-DTL-83503/7 approved, CWR-210 versions only
0003=100µ in. tin-lead

How to Order Socket Cable Assemblies

Cable assemblies with two socket connectors on a prescribed length of gray flat cable are available with the connectors oriented per drawings 9-1 or 9-2. (#1 contacts oriented on red conductor.) For other lengths, orientations, numbers or combinations of connectors, contact the factory or your local value-added distributor.

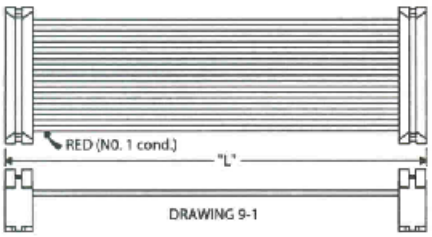

DRAWING 9-1

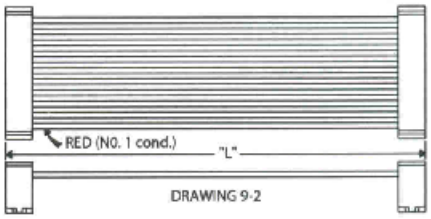

DRAWING 9-2

CA-XX-9X0X

Number of Conductors
(10, 14, 16, 20, 26, 34, 40, 50, or 60)

Type of Connectors
2=Socket Connectors with strain relief, CWR-210-XX-0021 (see drawing 9-1)
3=Socket Connectors without strain relief, CWR-220-XX-0021 (see drawing 9-2)

Final assembly length "L"
1=3"±1/8"
2=6"±1/8"
3=12"±1/4"
4=24"±1/4"
5=48"±1/4"

Header Connectors

Header connectors are often permanently mounted to PC boards and mate with female socket connectors having a .100 in. (2.54mm) x .100 in. (2.54mm) contact spacing.

The headers have male pins on their mating side and offer the designer a choice of either wire-wrap or solder posts in various lengths on the opposing end.

With CW, the designer also can choose either straight or right-angle contacts and allow sockets to mate with headers at right angles or parallel to mating PC board or wire-wrap plane. Optional ejection latches in various sizes are available, to mate with strain relief or non-strain relief sockets.

Polarization ribs are securely molded into place, eliminating the need for gluing polarizing keys to the header base. These ribs are easily removed for applications requiring a non-polarized interconnection.

CW headers are Mil-DTL-83503/20, 21, 24 and 25 approved.

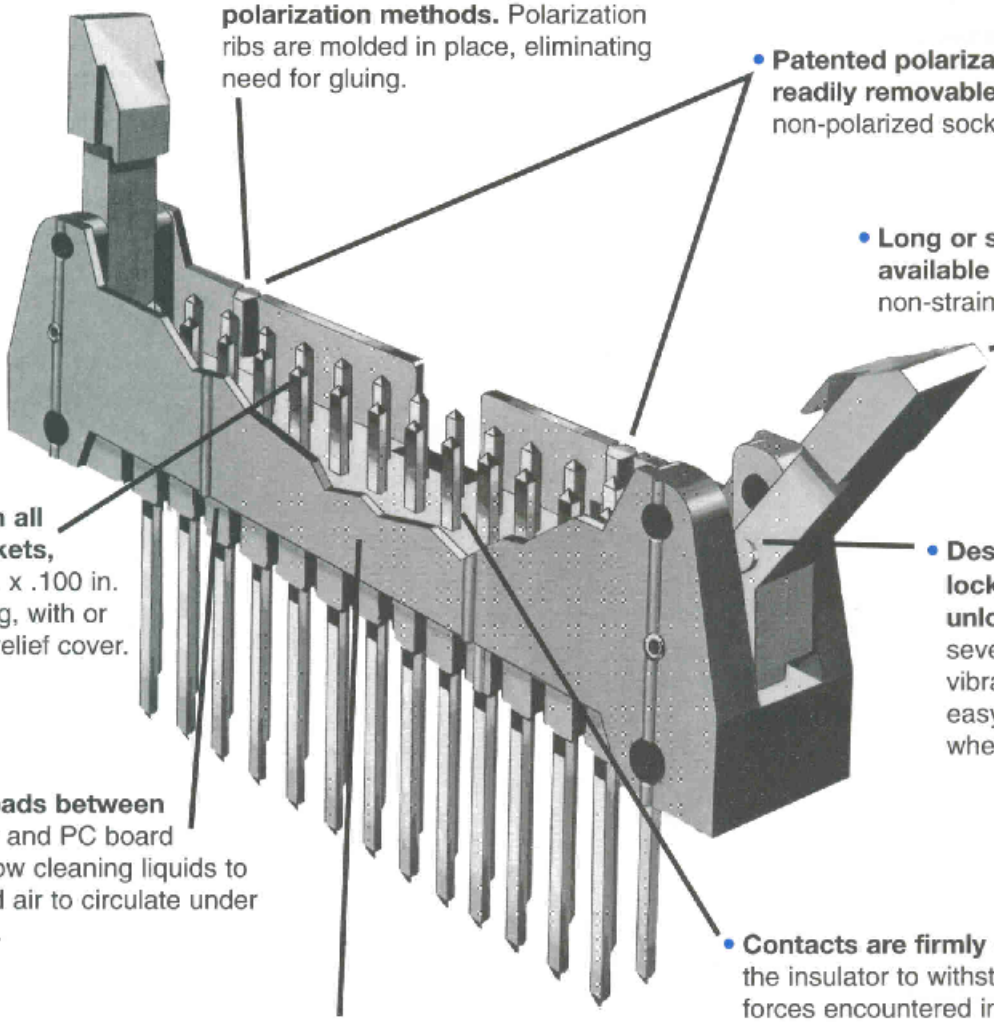

- **Compatible with DESC-approved polarization methods.** Polarization ribs are molded in place, eliminating need for gluing.
- **Patented polarization ribs are readily removable** for use with non-polarized sockets.
- **Long or short latches available** for strain relief or non-strain relief sockets.
- **Mateable with all standard sockets,** having .100 in. x .100 in. contact spacing, with or without strain relief cover.
- **Designed for lower locking force than unlocking.** Withstands severe jarring and vibration, yet permits easy ejection of socket when desired.
- **Standoff pads between connector** and PC board surface allow cleaning liquids to run off, and air to circulate under the header.
- **Contacts are firmly seated** in the insulator to withstand forces encountered in wire wrapping process.
- **Fully-shrouded design prevents misalignment of connectors even in blind applications.** Traditional design also available.

Contact

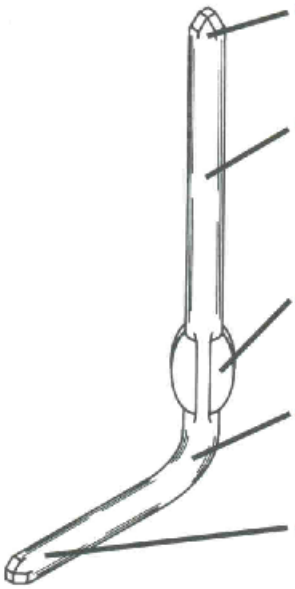

- **Rounded tips** lead pin into mating socket contact.
- **Square pins are available** to provide four corners for gas-tight contact in wire wrap applications.
- **Barbed contact** design locks pin securely in insulator.
- **Precisely shaped pins** provide for proper alignment to PC board.
- **Choice of pin lengths** for 1/16 in. or 1/8 in. thick PC boards or wire wrap applications.

Header Connector Features

- 10,14, 16, 20, 26, 34, 40, 50, 60 pin versions
- Available with right angle or straight solder tails for 1/16 in. or 1/8 in. thick PC boards
- Available with right angle or straight wire wrap terminals
- Gold-plated, phosphor bronze contacts standard
- Rugged, lightweight UL 94V-0 thermoplastic construction

Ejection Latches

Ejection latches are available for all CW Header connectors. These latches assure secure locking of the Socket to the Header, as well as simple, trouble-free detachment of the mated Socket from the Header. An audible click indicates that Header and Socket are fully mated. The latching surfaces are consistent with DESC requirements for interchangeability.

Two latch sizes are featured—short for non-strain relief sockets and long for strain relief sockets. For others, contact factory. Each latch is held securely in place with a roll pin and can be removed at a work bench or in the field.

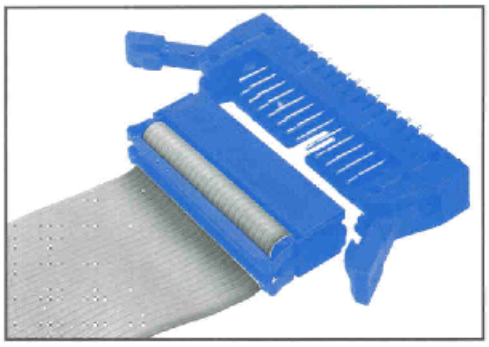

Polarization

Choose your polarization method from one of three options:

Method I: Grooves in sockets CWR-210 and 220 match up with ribs on mating headers. (Mil-DTL-83503 approved method.) For use with non-polarized sockets, the ribs may be quickly, easily and cleanly removed with a simple tool in the field, at a workbench or at the factory prior to shipment.

Method II: Plastic key inserted into socket contact prevents mismating if corresponding header contact is removed.

Method III: In addition to mating socket grooves and headers slots, central polarizing key on one socket side (CWR-217 and CWR-227) mates with matching central header slot.

Method I

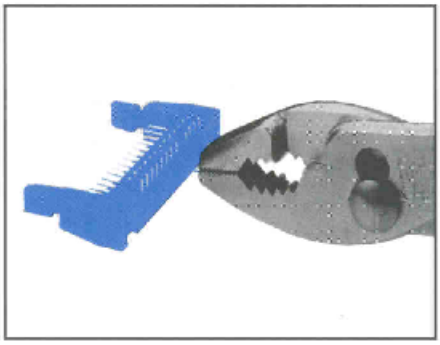

Method II

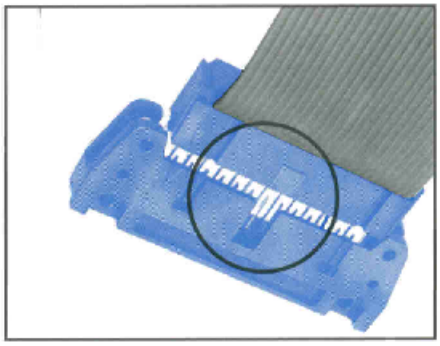

Method III

Engineering Dimensions

Dimensions

Right Angle Header

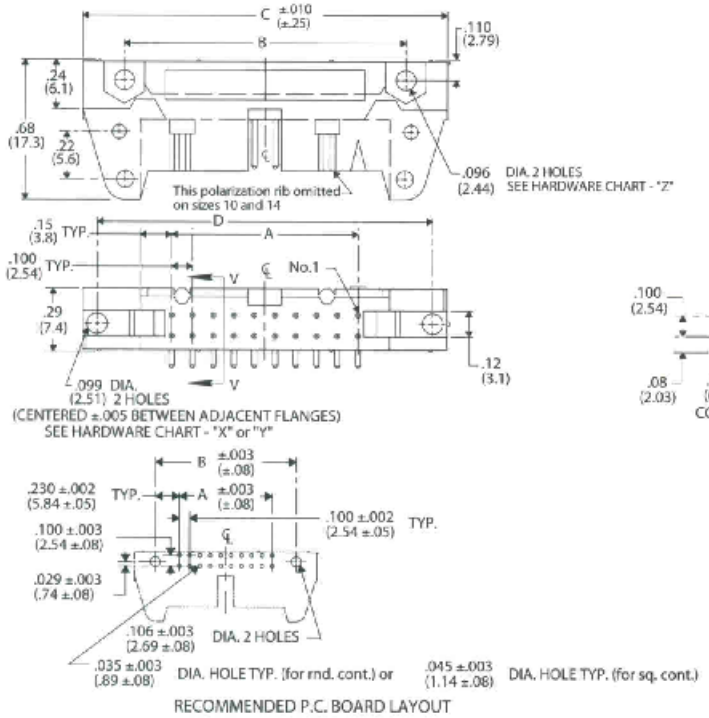

HARDWARE CHART			
TYPE	"X"	"Y"	"Z"
THREAD	2-56 UNC	1-72 UNF	2-56 UNC
HEAD	HEX.	RND.	OPT.

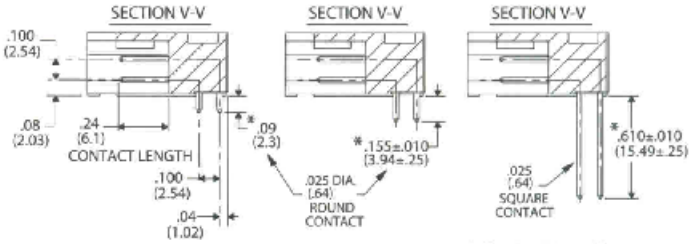

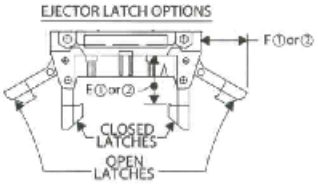

**** Contact lengths and Tolerances are different for Mil-Dtl Connectors. Consult factory for specifications.***

Straight Header

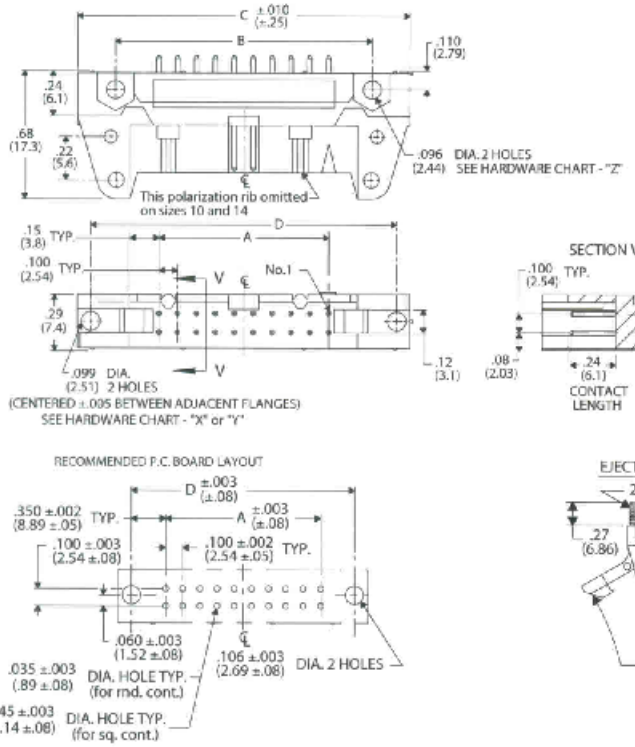

HARDWARE CHART			
TYPE	"X"	"Y"	"Z"
THREAD	2-56 UNC	1-72 UNF	2-56 UNC
HEAD	HEX.	RND.	OPT.

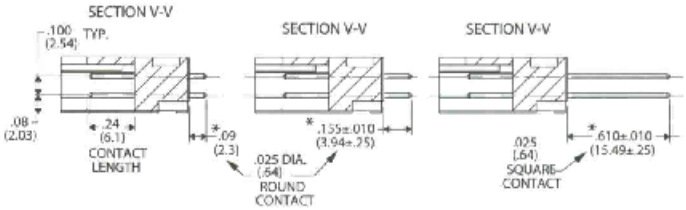

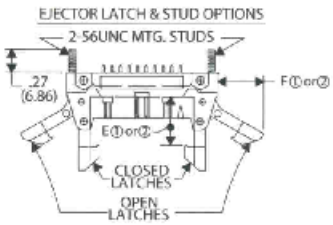

**** Contact lengths and Tolerances are different for Mil-Dtl Connectors. Consult factory for specifications.***

Specifications and Ordering Information

Specifications

- Contacts: phosphor bronze standard
- Contact Plating: 30µ in. gold (in mating area) over 50µ in. nickel, standard; 10µ gold (in mating area) over 50µ in. nickel, optional; 50µ in. gold (in mating area) over 50µ in. nickel, optional
- Insulator Material: UL 94V-0 flame - retardant thermoplastic
- Color: blue
- Operating Temperature: -55ºC to +125ºC
- Current Rating: 1A (maximum) per contact
- Dielectric Withstand Voltage: greater than 500 Vdc at sea level
- Insulation Resistance: greater than 5 x 10^9 ohms
- U.S. Defense Department Mil-DTL-83503/20, 21, approved

How to Order Header Connectors

CWN-XXX-XX-XXXX

Type of Connector
3=polarized header
4=non-polarized header*

Pin Configuration
0=right angle solder pins. .090" long
1=right angle solder pins .155"long
2=right angle wire wrap
5=straight solder pins, .090" long
6=straight solder pins, .155" long
7=straight wire wrap pins

Latches
0=no latches
1=short latches for non-strain relief sockets (.425")
2=long latches for strain relief sockets (.573")

Number of Contacts
(10, 14, 16, 20, 26, 34, 40, 50, 60)

Plating
0021=30µ gold (in mating area) over 50µ in. nickel (standard)
0000=10µ in. gold (in mating area) over 50µ in. nickel
0022=50µ in. gold (in mating area) over 50µ in. nickel Mil-DTL -83503 approved. **CWN-3X2 versions only**
0077=Duplex plated, 30µ in. gold in mating area, 100µ in. tin-lead in solder pin area, all over 50µ in. nickel (optional)

HEADER DIMENSION CHART

NO. CONT's	A	B	C	D	E①	E②	F①	F②
10	.400 (10.16)	.860 (21.84)	1.260 (32.00)	1.100 (27.94)	.425 (10.80)	.573 (14.55)	.40 (10.2)	.51 (12.6)
14	.600 (15.24)	1.060 (26.92)	1.460 (37.08)	1.300 (33.02)				
16	.700 (17.78)	1.160 (29.46)	1.560 (39.62)	1.400 (35.56)				
20	.900 (22.86)	1.360 (34.54)	1.760 (44.70)	1.600 (40.64)				
26	1.200 (30.48)	1.660 (42.16)	2.060 (52.32)	1.900 (48.26)				
34	1.600 (40.64)	2.060 (52.32)	2.460 (62.48)	2.300 (58.42)				
40	1.900 (48.26)	2.360 (59.94)	2.760 (70.10)	2.600 (66.04)				
50	2.400 (60.96)	2.860 (72.64)	3.260 (82.80)	3.100 (78.74)				
60	2.900 (73.66)	3.360 (85.34)	3.760 (95.50)	3.600 (91.44)				

E① and F① pertains to all headers with short latches
E② and F② pertains to all headers with long latches
*Polarizing ribs removed

Headers - Fully Shrouded

Engineering Dimensions

Dimensions

Right Angle Header

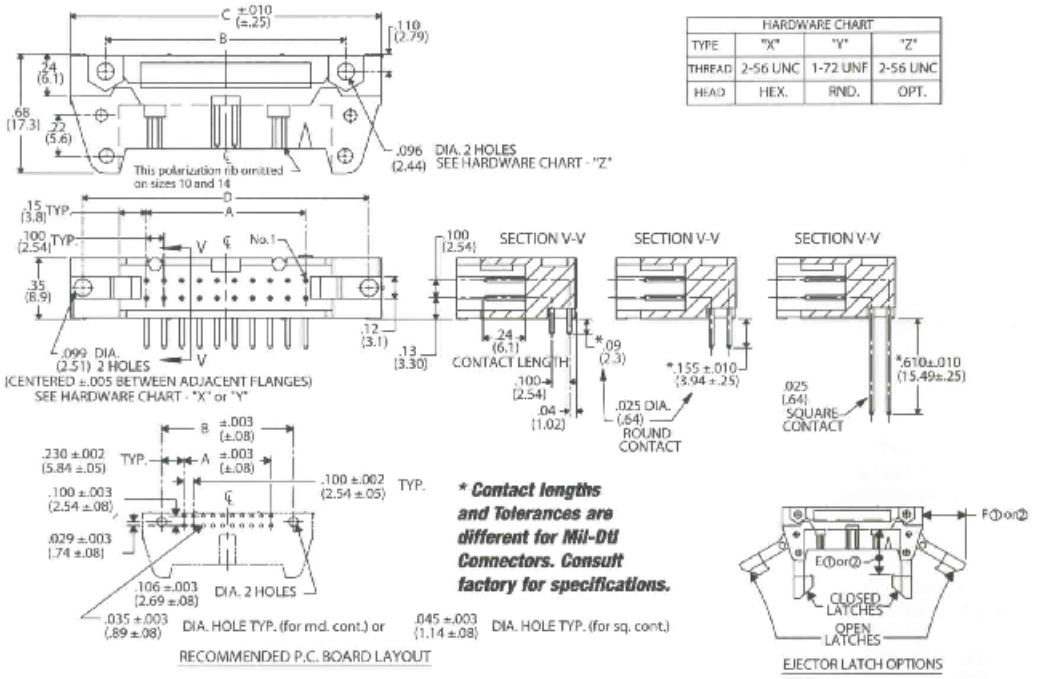

HARDWARE CHART			
TYPE	"X"	"Y"	"Z"
THREAD	2-56 UNC	1-72 UNF	2-56 UNC
HEAD	HEX.	RND.	OPT.

**** Contact lengths and Tolerances are different for Mil-Dtl Connectors. Consult factory for specifications.***

Straight Header

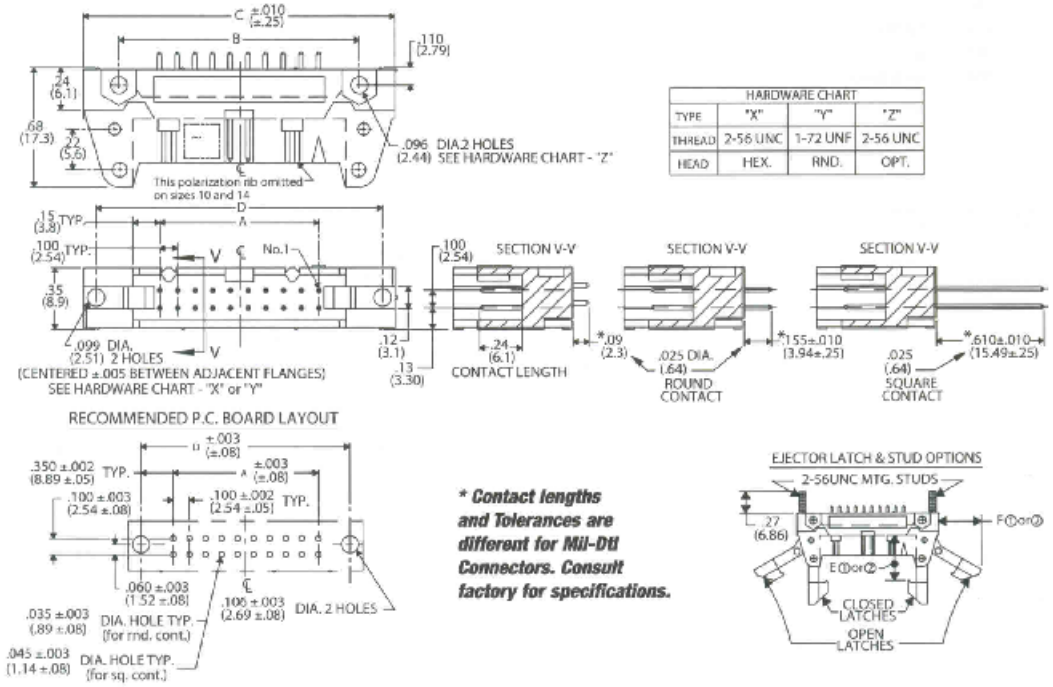

HARDWARE CHART			
TYPE	"X"	"Y"	"Z"
THREAD	2-56 UNC	1-72 UNF	2-56 UNC
HEAD	HEX.	RND.	OPT.

**** Contact lengths and Tolerances are different for Mil-Dtl Connectors. Consult factory for specifications.***

Specifications and Ordering Information

Specifications

- Contacts: phosphor bronze standard
- Contact Plating: 30µ in. gold (in mating area) over 50µ in. nickel, standard; 10µ gold (in mating area) over 50µ in. nickel, optional; 50µ in. gold (in mating area) over 50µ in. nickel, optional
- Insulator Material: UL 94V-0 flame - retardant thermoplastic
- Color: blue
- Operating Temperature: -55ºC to +125ºC
- Current Rating: 1A (maximum) per contact
- Dielectric Withstand Voltage: greater than 500 Vdc at sea level
- Insulation Resistance: greater than 5 x 10^9 ohms
- U.S. Defense Department Mil-DTL-83503/24, and 25 approved

How to Order Fully Shrouded Header Connectors

CWN-XXX-XX-XXXX

Type of Connector
5 = polarized header
6 = non-polarized header*

Pin Configuration
0=right angle solder pins. .090" long
1=right angle solder pins. .155" long
2=right angle wire wrap
5=straight solder pins, .090" long
6=straight solder pins, .155" long
7=straight wire wrap pins

Latches
0=no latches
1=short latches for non-strain relief sockets (.425")
2=long latches for strain relief sockets (.573")

Number of Contacts
(10, 14, 16, 20, 26, 34, 40, 50 or 60)

Plating
0021=30µ in. gold (in mating area) over 50µ in. nickel (standard)
0000=10µ in. gold (in mating area) over 50µ in. nickel
0022=50µ in. gold (in mating area) over 50µ in. nickel Mil-DTL -83503 approved. **CWN-5X2 versions only**
0077=Duplex plated, 30µ in. gold in mating area, 100µ in. tin-lead in solder pin area, all over 50µ in. nickel (optional)

HEADER DIMENSION CHART

NO. CONT's	A	B	C	D	E①	E②	F①	F②
10	.400 (10.16)	.860 (21.84)	1.260 (32.00)	1.100 (27.94)	.425 (10.80)	.573 (14.55)	.40 (10.2)	.51 (12.6)
14	.600 (15.24)	1.060 (26.92)	1.460 (37.08)	1.300 (33.02)				
16	.700 (17.78)	1.160 (29.46)	1.560 (39.62)	1.400 (35.56)				
20	.900 (22.86)	1.360 (34.54)	1.760 (44.70)	1.600 (40.64)				
26	1.200 (30.48)	1.660 (42.16)	2.060 (52.32)	1.900 (48.26)				
34	1.600 (40.64)	2.060 (52.32)	2.460 (62.48)	2.300 (58.42)				
40	1.900 (48.26)	2.360 (59.94)	2.760 (70.10)	2.600 (66.04)				
50	2.400 (60.96)	2.860 (72.64)	3.260 (82.80)	3.100 (78.74)				
60	2.900 (73.66)	3.360 (85.34)	3.760 (95.50)	3.600 (91.44)				

E① and F① pertains to all headers with short latches
E② and F② pertains to all headers with long latches
*Polarizing ribs removed

Low-Profile Box Headers

Designed to mate with all standard female sockets, with or without center polarizing bump, these completely shrouded, low profile headers reduce height and board area by as much as 50%. Available in straight and right angle solder pins for 1/16" and 1/8" PC boards, and also edgeboard styles. Removable polarization ribs provide capability for mating with all sockets on .100" x .100" centers.

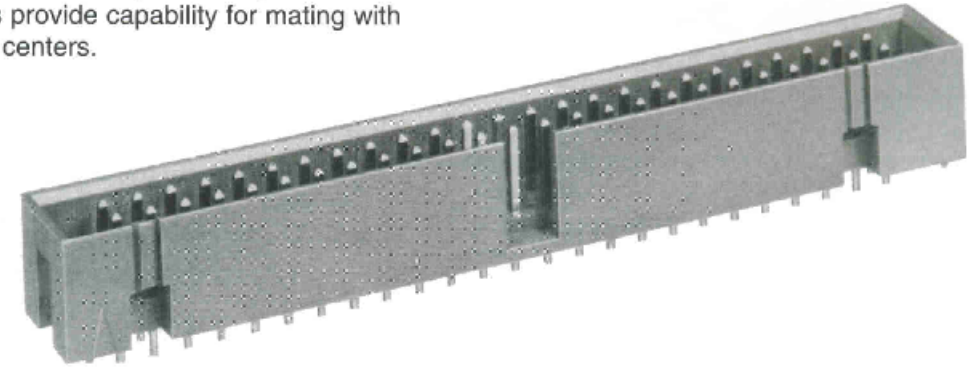

Materials and Operating Standards

Specifications:

- Contacts: phosphor bronze standard
- Contact Plating: Selective plated, 30µ in. gold (in mating area) over 50µ in. nickel, standard
- Insulator Material: UL 94V-0 flame - retardant thermoplastic
- Color: blue
- Operating Temperature: -55ºC to +125ºC
- Current Rating: 1A (maximum) per contact
- Dielectric Withstand Voltage: greater than 500 Vdc at sea level
- Insulation Resistance: greater than 5 x 10^9 ohms

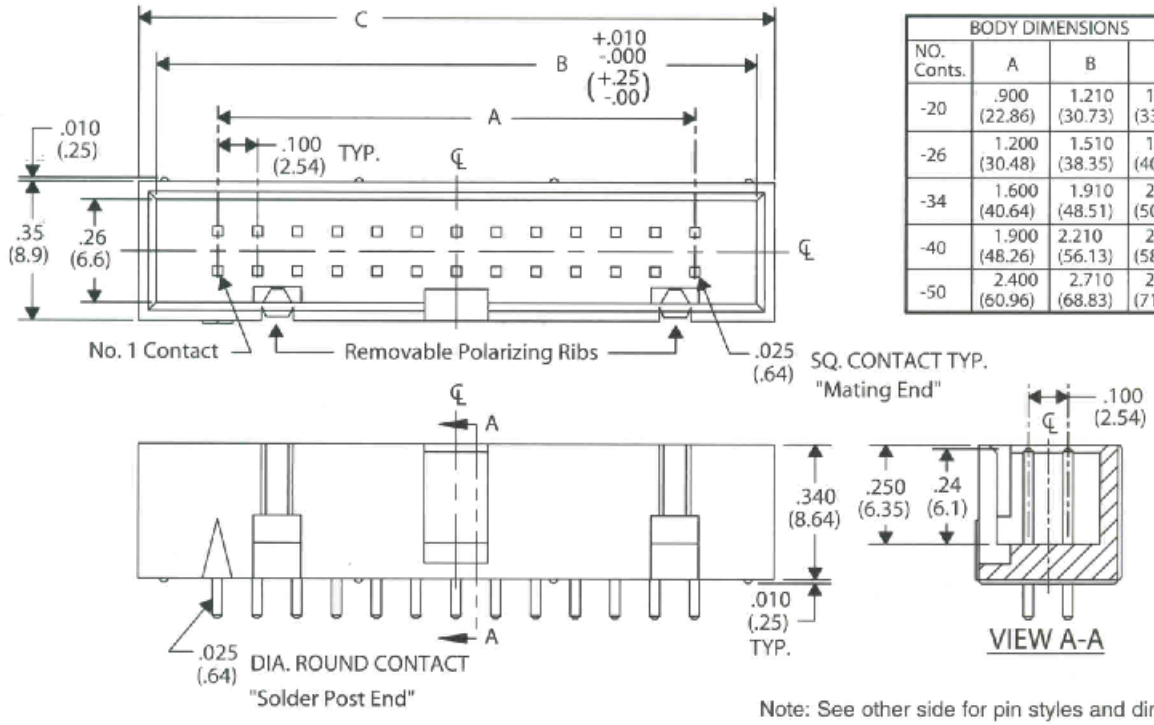

BODY DIMENSIONS			
NO. Conts.	A	B	C
-20	.900 (22.86)	1.210 (30.73)	1.300 (33.02)
-26	1.200 (30.48)	1.510 (38.35)	1.600 (40.64)
-34	1.600 (40.64)	1.910 (48.51)	2.000 (50.80)
-40	1.900 (48.26)	2.210 (56.13)	2.300 (58.42)
-50	2.400 (60.96)	2.710 (68.83)	2.800 (71.12)

Note: See other side for pin styles and dimensions.

Box Header with Straight Contacts Recommended PC Board Layout

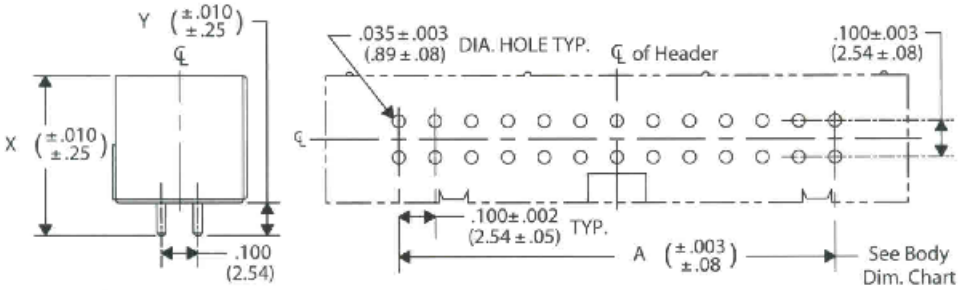

TERMINAL OPTION CHART		
P.C.B. THK.	X	Y
.062 (1.57)	.440 (11.18)	.09 (2.3)
.125 (3.18)	.505 (12.33)	.155 (3.94)

Box Header with Right Angle Contacts Recommended PC Board Layout

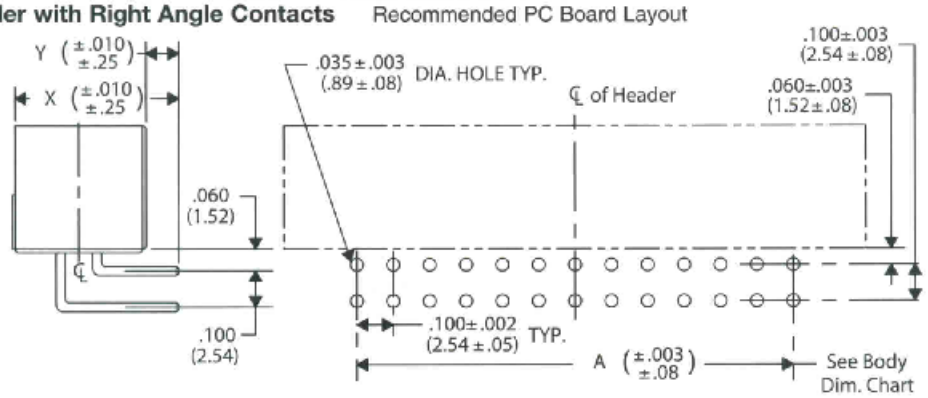

TERMINAL OPTION CHART		
P.C.B. THK.	X	Y
.062 (1.57)	.450 (11.43)	.09 (2.3)
.125 (3.18)	.515 (13.08)	.155 (3.94)

Edgeboard Box Header Recommended PC Board Pad Layout

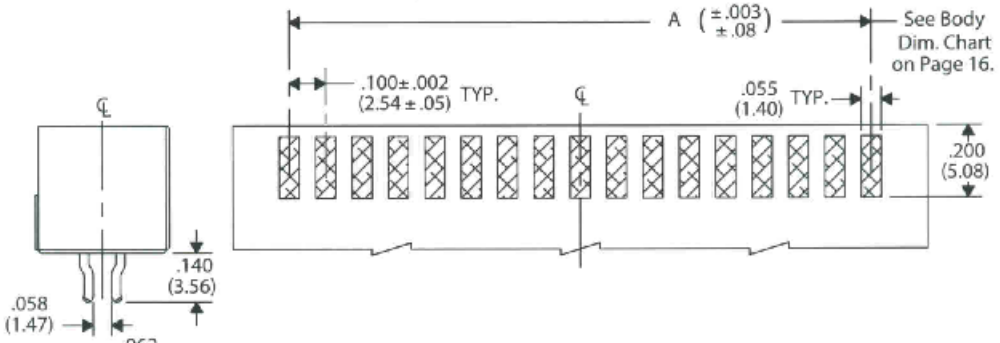

For use with .062 (1.57) P.C.B., Contact factory for optional P.C.B. applications.

How to Order Low Profile Box Headers

CWN-XXX-XX-XXXX

Type of Connector
33=Straight or Right Angle Polarized Header
43=Straight or Right Angle Non-Polarized Header
53=Edgeboard Header, Polarized
63=Edgeboard Header, Non-Polarized

Pin Configuration
0=Right Angle Solder Pins, .090" long (1/16" PCB)
1=Right Angle Solder Pins, .155" long (1/8" PCB)
5=Straight Solder Pins, .090" long (1/16" PCB)
6=Straight Solder Pins, .155" long (1/8" PCB)
8=Straight Solder Pins, .140" long for Edgeboard Header (1/16" PCB)

Number of Contacts
(20, 26, 34, 40, 50)

Plating
0021=Selective plated, 30µ in. gold (in mating area) over 50µ in. nickel (standard)
0000=Selective plated,10µ in. gold (in mating area) over 50µ in. nickel (optional)
0077=Duplex plated, 30µ in. gold in mating area, 100µ in. tin-lead in solder pin area, all over 50µ in. nickel (optional)
Other platings available. Consult factory.

D-Subminiature Connectors–All-Plastic

The D-Subminiature Insulation Displacement Connector is a popular standard for interconnecting many types of electronic equipment–computers and peripherals, instruments, telecommunications and test equipment–throughout the military, industrial, and commercial product sectors.

CW's D-Subminiature connectors consist of four sizes of each of two types of D-Subminiature connectors...pin and socket versions...mating to standard 9, 15, 25, and 37 conductor cable. All CW D-Subminiature connectors incorporate two basic series of patents assuring contact integrity with the cable as well as the mating connector. These connectors are UL and CSA listed and are designed to meet the standards of Mil-DTL-83503. They are fully interchangeable and mate with other standard D-Subminiature connectors.

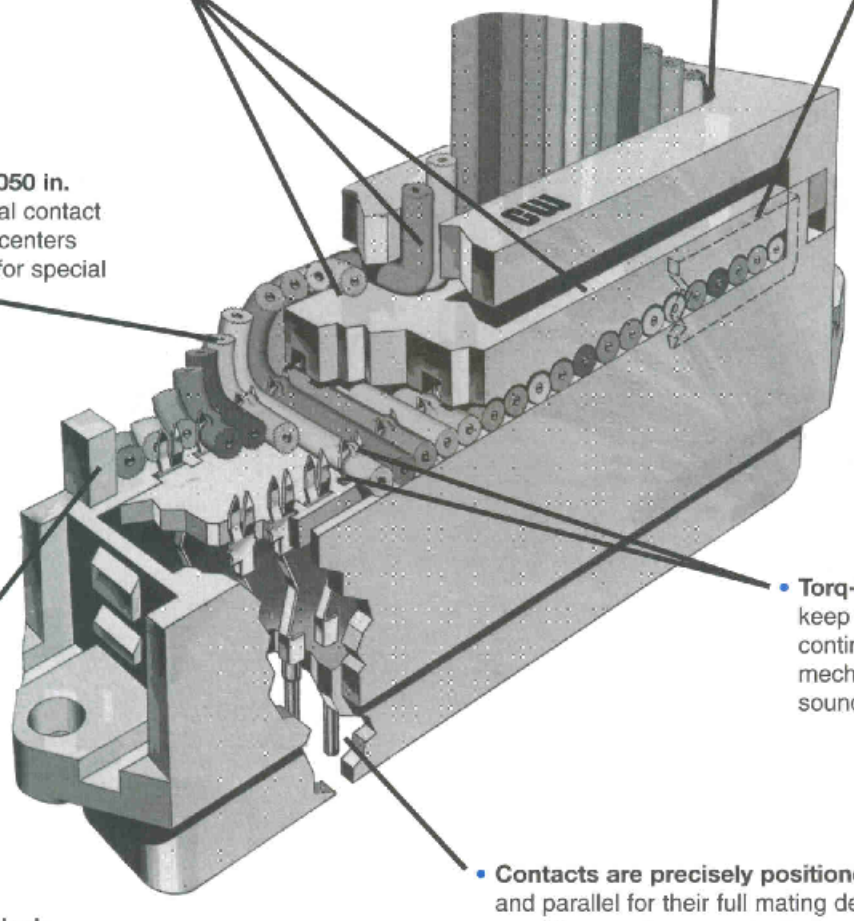

Contact

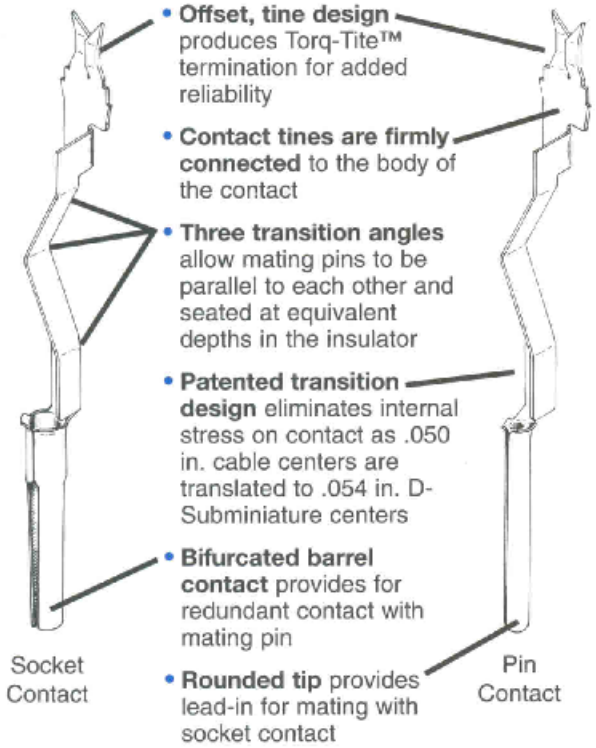

- **Offset, tine design** produces Torq-Tite™ termination for added reliability
- **Contact tines are firmly connected** to the body of the contact
- **Three transition angles** allow mating pins to be parallel to each other and seated at equivalent depths in the insulator
- **Patented transition design** eliminates internal stress on contact as .050 in. cable centers are translated to .054 in. D-Subminiature centers
- **Bifurcated barrel contact** provides for redundant contact with mating pin
- **Rounded tip** provides lead-in for mating with socket contact

D-Subminiature Features

- 9-, 15-, 25-, 37- pin or socket versions available
- Interchangeable and mateable with other D's
- UL, CSA listed
- Patented 0.050/0.054 in. (1.27/1.38mm) cable/connector transition
- Fully mating, precisely positioned contacts
- Patented off-set contact tines assure gas-tight connection
- Rugged, lightweight UL 94 V-O thermoplastic construction
- No exposed metal
- Positive polarization via D-shaped contact shroud
- All contacts numbered
- Accepts 28 AWG solid or stranded and 30 AWG solid conductors in both shielded and unshielded flat cables
- Positive, fast termination. No special assembly tooling required
- Simple, non-destructive removal of covers
- Three strain relief options available
- Easily daisy chained
- Hardware for a variety of mounting methods available
- Jackscrew design (CWN-HK-01) accepts a standard miniature banana plug for grounding
- Manufactured under U.S. patent 3,990,767.

Patented Contact Transition

The CW contact transition is unique in that all contacts are precisely positioned to provide full contact with their mating member at every pin and socket. CW's internal transition from .050 in. to .054 in. centers eliminates the need for special cables or special cable preparation. It also eliminates the possibility of pin misalignment, and excessive insertion/withdrawal forces, providing maximum contact integrity, minimum contact resistance, and long term reliability.

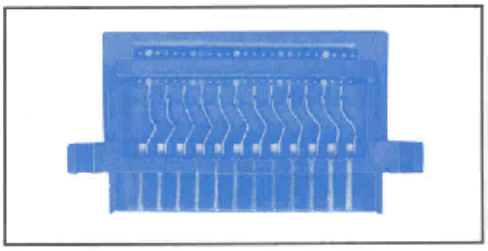

Three-way Strain Relief

CW's exclusive design allows for three-way strain relief. This feature offers you a choice of three cable entry/exit options providing maximum flexibility and system design.

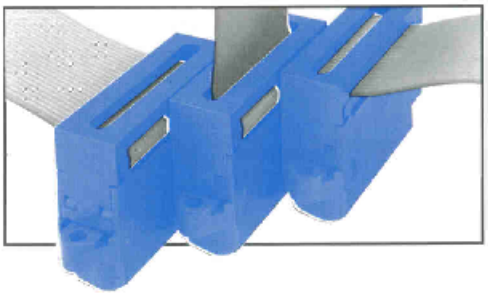

Assembly That's a Snap

CW supplies a cover factory preassembled to the base, with the cover in a detented "up" position to allow sufficient space to insert the cable. There is no need for special cable alignment tooling. Built-in guides in both the cover and base orient the cable conductors to the connector contacts.

Removable Cover

CW insulation displacement D-Subminiature connectors permit simple, non-destructive removal of the cover for maintenance and connector reuse–the open end of a paper clip and a special groove in the mounting flange (standard on all CW D's) is all that is required to remove the cover.

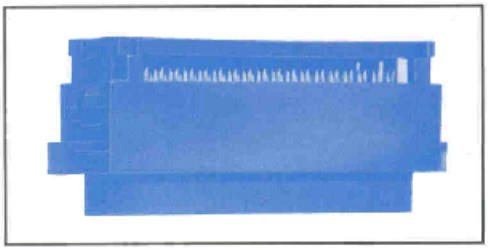

D-Subminiature–All-Plastic

Engineering Dimensions

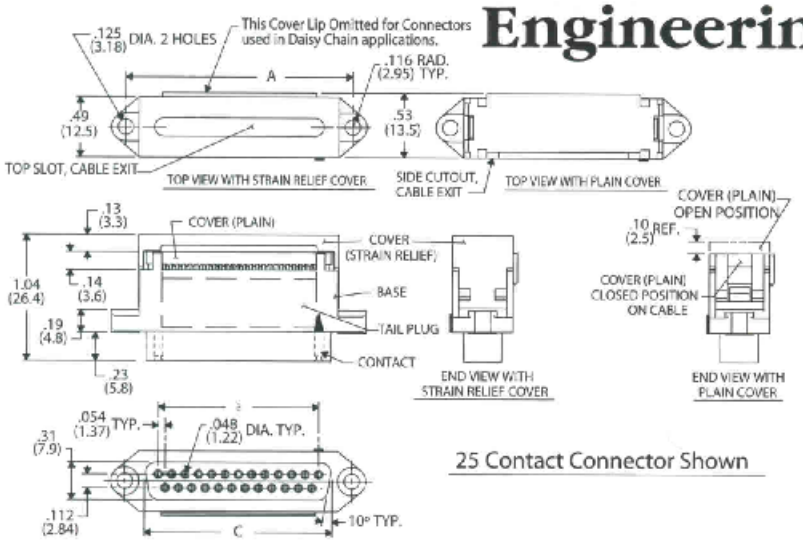

25 Contact Connector Shown

Socket D Connector

CONNECTOR DIMENSIONS			
NO. CONTS.	A	B	C
9	.984 (24.99)	.434 (11.02)	.640 (16.26)
15	1.312 (33.32)	.760 (19.30)	.966 (24.54)
25	1.852 (47.04)	1.303 (33.10)	1.510 (38.35)
37	2.500 (63.50)	1.955 (49.66)	2.162 (54.91)

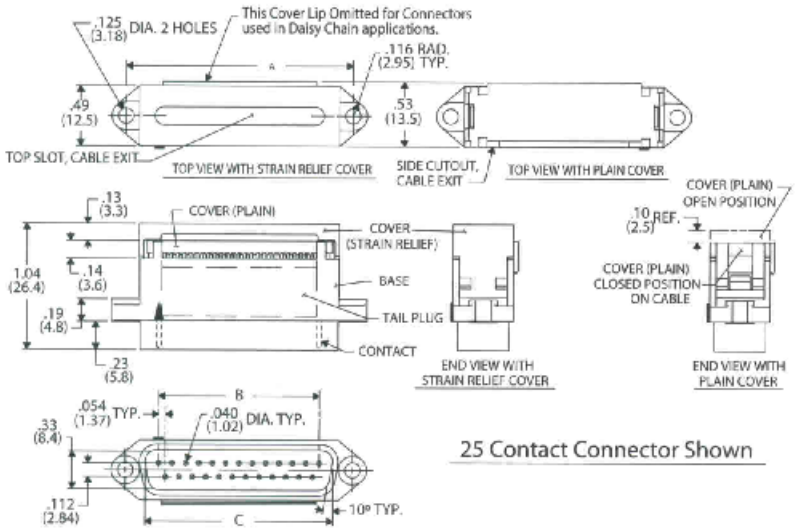

25 Contact Connector Shown

Pin D Connector

CONNECTOR DIMENSIONS			
NO. CONTS.	A	B	C
9	.984 (24.99)	.434 (11.02)	.660 (16.76)
15	1.312 (33.32)	.760 (19.30)	.986 (25.04)
25	1.852 (47.04)	1.303 (33.10)	1.530 (38.86)
37	2.500 (63.50)	1.955 (49.66)	2.182 (55.42)

Hardware Mounting Kits for All-Plastic D-Connectors

To order, specify CWN-HK-XX.

CWN-HK-01

For midspan splices or panel mounting with 2-56

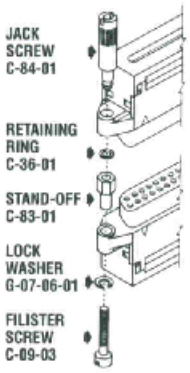

CWN-HK-02

For midspan splices with metal-shell D connectors using 4-40 hardware.

CWN-HK-03

Two 4-40 threaded jack screws and retaining rings for midspan splices.

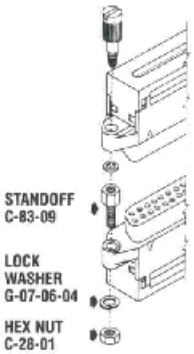

CWN-HK-04

Two 4-40 threaded jack sockets, lock washers and hex nuts for midspan splices or panel mounting.

CWN-HK-05

Two 4-40 threaded jack screws and thread press-fit inserts* for midspan cable splices.

*requires connector mounting holes enlarged to .150".

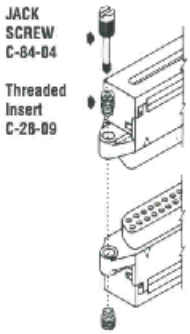

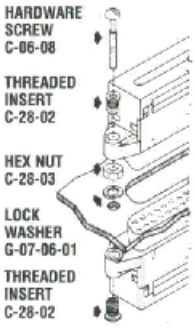

CWN-HK-06

Two 2-56 threaded screws, four threaded press-fit inserts, two hex nuts and lock washers for economical midspan splices.

Specifications and Ordering Information

Specifications

- Contacts: phosphor bronze standard
- Contact Plating: 30µ in. gold (in mating area) over 50µ in. nickel, standard; 10µ in. gold (in mating area) over 50µ in. nickel, optional; 50µ in. gold (in mating area) over 50µ in. nickel, optional; 100µ in. 60/40 tin-lead, optional
- Insulator material: UL 94V-0 flame - retardant thermoplastic
- Cover pull-off force 8 oz/contact minimum (force applied along contacts' primary axes)
- Strain Relief Cover: standard
- Withdrawal force 2-8 oz/contact, typical
- Color: blue
- Operating temperature: -55º to +125ºC
- Current 1A(maximum) per contact
- Dielectric Withstand Voltage: 500 Vdc (sea level)
- Insulation resistance: 5 x 10^9 ohms

How to Order All-Plastic D-Subminiature Connectors

CWR-XXX-XX-00XX

Type of Connector
182=D-Subminiature for cable end terminations, pin contact (Standard)
183=D-Subminiature for cable end terminations, socket contact (Standard)
180=D-Subminiature connector for daisy chain applications, pin contact
181=D-Subminiature connector for daisy chain applications, socket contact

Number of Contacts
(9, 15, 25, 37)

Plating
0021=30µ in. gold (in mating area) over 50µ in. nickel (standard)
0000=10µ in. gold (in mating area) over 50µ in. nickel
0055=50µ in. gold (in mating area) over 50µ in. nickel
0003=100µ in. tin-lead

How to Order D-Subminiature Cable Assemblies

Cable assemblies with two D-Subminiature connectors on a prescribed length of gray flat cable are available with the connectors oriented per drawings 19-1, 19-2, or 19-3 (#1 contacts oriented to red conductor.) For other lengths, orientations, numbers or combinations of connectors, contact the factory or your local value-added distributor.

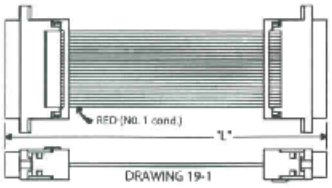

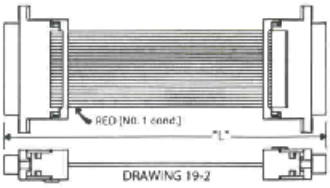

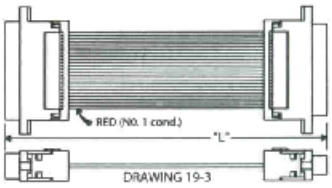

CA-XX-9X0X

Number of Conductors
(9, 15, 25, 37)

Type of Connectors
6=Two D-Subminiature connectors with pin contacts, CWR-182-XX-0021 (see drawing 19-1)
7=Two D-Subminiature connectors with socket contacts, CWR-183-XX-0021 (see drawing 19-2)
8=A D-Subminiature connector with pin contacts. CWR-182-XX-0021, on one end and a D-Subminiature connector with socket contacts. CWR-183-XX-0021, on the other end (see drawing 19-3)

Final assembly length "L"
1=3"±1/8"
2=6"±1/8"
3=12"±1/4"
4=24"±1/4"
5=48"±1/4"

D-Subminiature connectors with metal face and EMI/RFI shield

The Problem:

Stray Electromagnetic Interference (EMI) and Radio Frequency Interference (RFI) emitted from unshielded cables, connectors, and assemblies can affect the performance of electronic devices within the range of these emissions. The Federal Communications Commission requires EMI/RFI shielding to standards defined in F.C.C. Docket 20780, Part 15 on all newly manufactured equipment. Connectors, cable, and assemblies, if an integral part of this equipment, are within the scope of the F.C.C. decree and must be appropriately shielded.

The CW Solution:

CW makes available a choice of two solutions. Select the system that best solves your EMI/RFI emission problem.

METAL-FACED D-SUBMINIATURE– A metal face forms the front of your D-Subminiature connector and shields high-frequency radiation that eminates principally from the point of external interconnection. These connectors also mate with traditional metal-faced D connectors.

EMI/RFI SHIELD–A bright tin-plated metal shield can be added to the METAL-FACED connector to form a complete metal enclosure. Laboratory tests show that our Subminiature D connector enclosed in our assembled shield can reduce strays by up to 80dB. Performance comparison and test results are indicated graphically in the chart at right. When terminated to jacketed-and-shielded flat cable, properly stripped to expose an external conductive surface, the shielding interfaces redundantly with CW's conductive shield placing the entire assembly at "ground". CW's shield can be used on either cable end terminations or in "daisy chain" terminations along the cable. METAL SHIELDS are available to cover 9, 15, 25, and 37 pin or socket Subminiature D connectors. CW's METAL SHIELDS are designed for easy and rapid assembly to our METAL-FACED Subminiature D-connectors. No supplemental fasteners or assembly tools are required.

Test Results

Radiated Emission Comparison
Unshielded vs. CW Shielded D-Subminiatures Assemblies

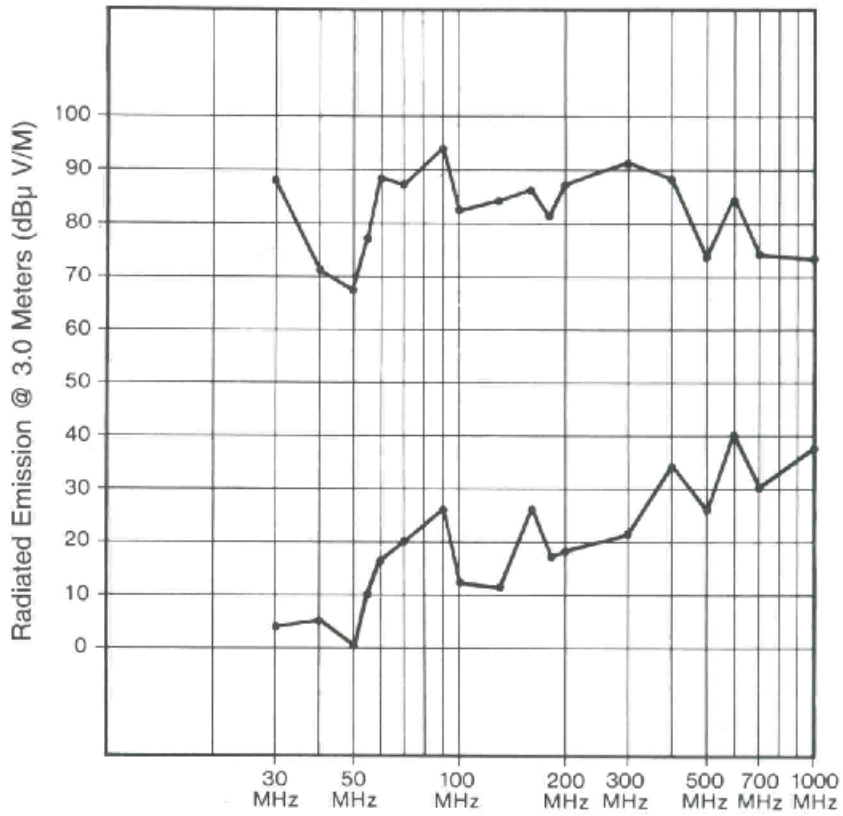

CW metal-faced D-Subminiature connector with assembled EMI/RFI shield

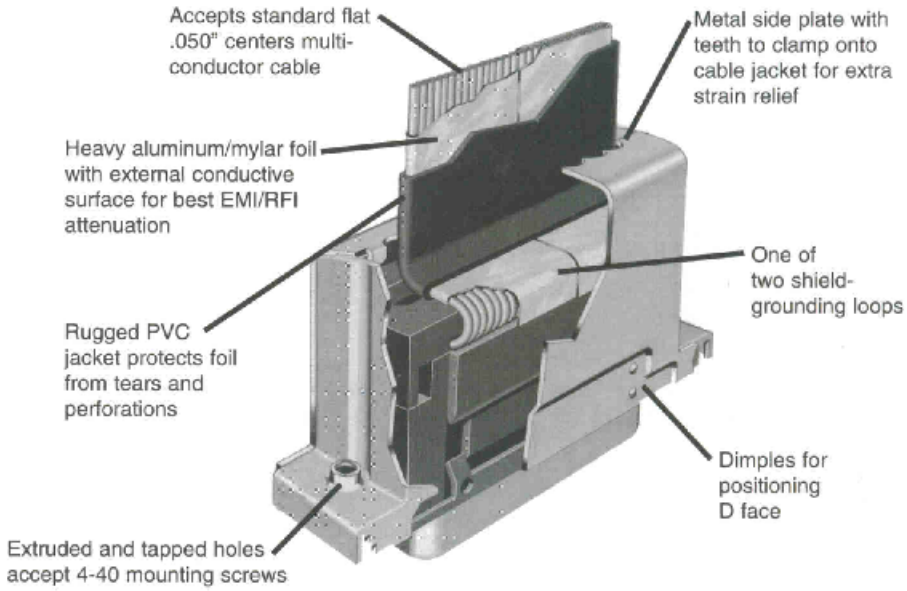

D-Subminiature connector with metal face

CW metal faced D-Subminiature connectors are ideal for input/output applications and interconnecting electronic equipment. These connectors are designed to the applicable standards of Mil-DTL-24308 and are interchangeable and mateable with other connectors so designed.

APPROVED QPL MIL-DTL-83503

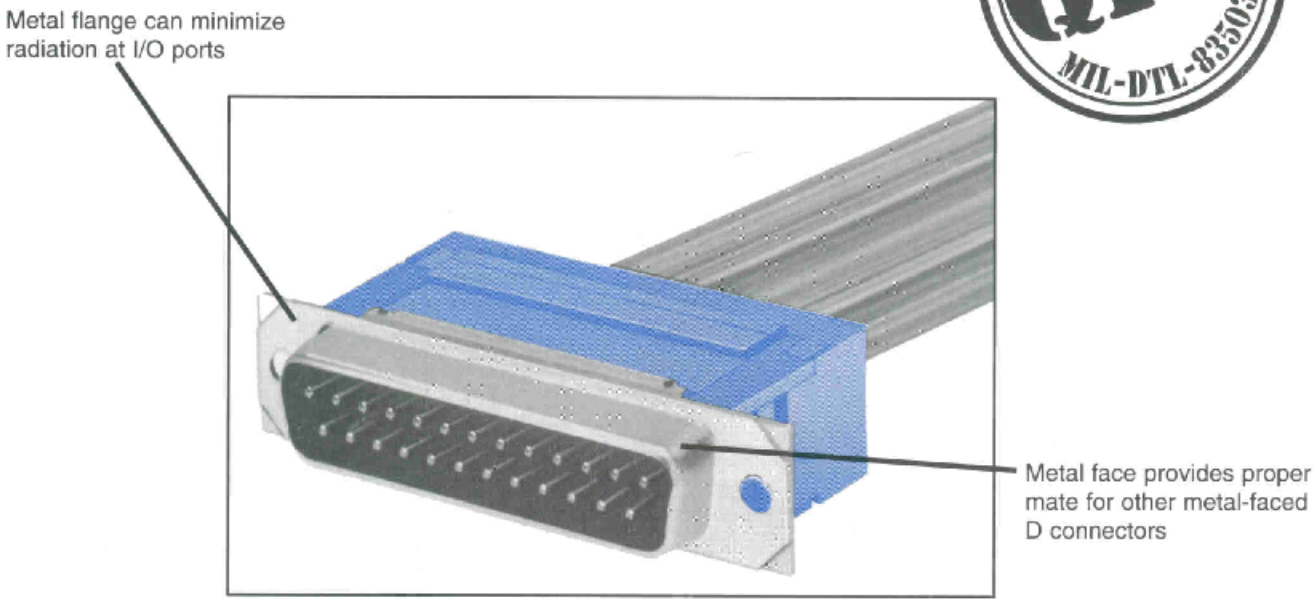

Assemble an EMI/RFI shield to our D-Subminiature connector in a snap

After terminating the connector to C-03-021 or C-03-031 style jacketed and shielded flat cable, slide the D-Subminiature connector with metal face into the preassembled shield.

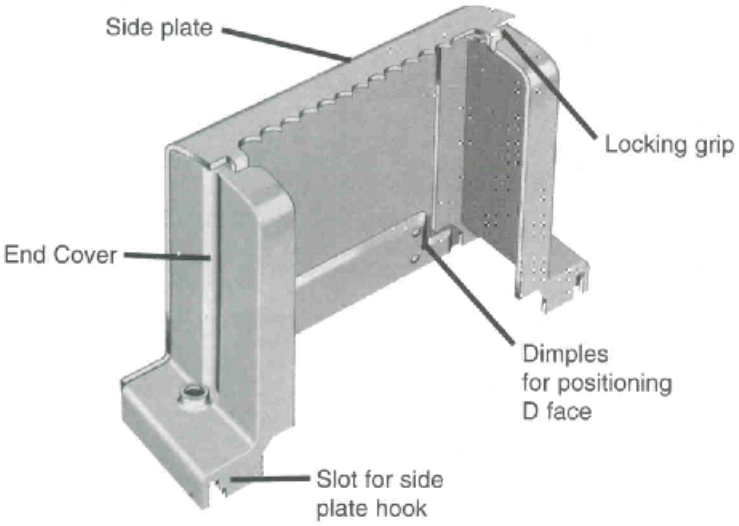

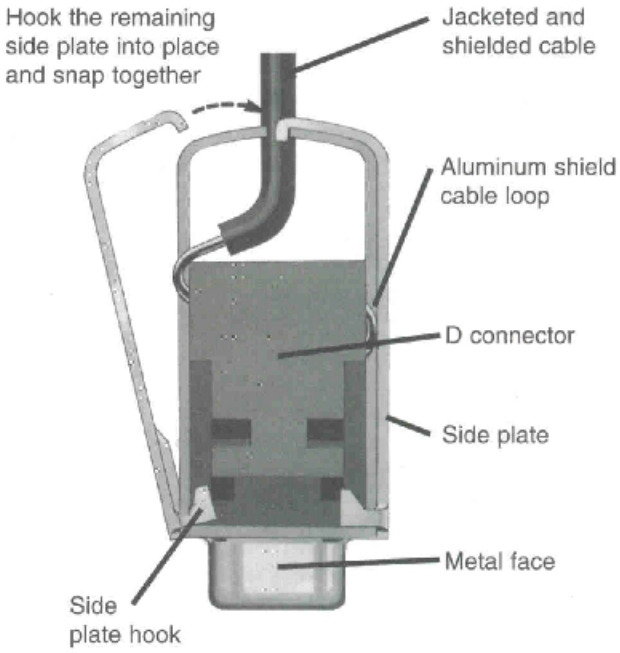

D-Subminiature connectors with metal face
(Bright tin-plated C.R.S.)

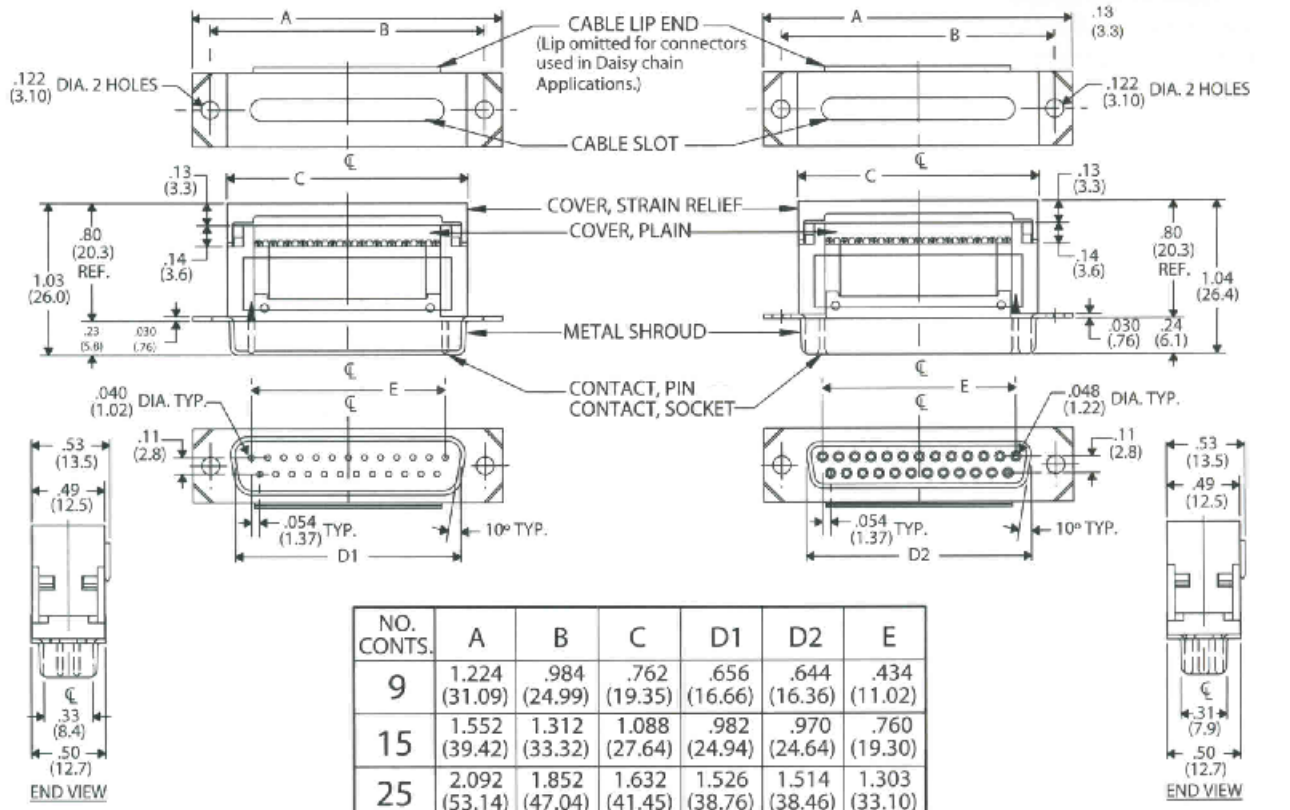

NO. CONTS.	A	B	C	D1	D2	E
9	1.224 (31.09)	.984 (24.99)	.762 (19.35)	.656 (16.66)	.644 (16.36)	.434 (11.02)
15	1.552 (39.42)	1.312 (33.32)	1.088 (27.64)	.982 (24.94)	.970 (24.64)	.760 (19.30)
25	2.092 (53.14)	1.852 (47.04)	1.632 (41.45)	1.526 (38.76)	1.514 (38.46)	1.303 (33.10)
37	2.740 (69.60)	2.500 (63.50)	2.284 (58.01)	2.178 (55.32)	2.166 (55.02)	1.955 (49.66)

25 CONTACT CONNECTOR (SHOWN)

EMI/RFI Shielded (Bright tin-plated C.R.S.)

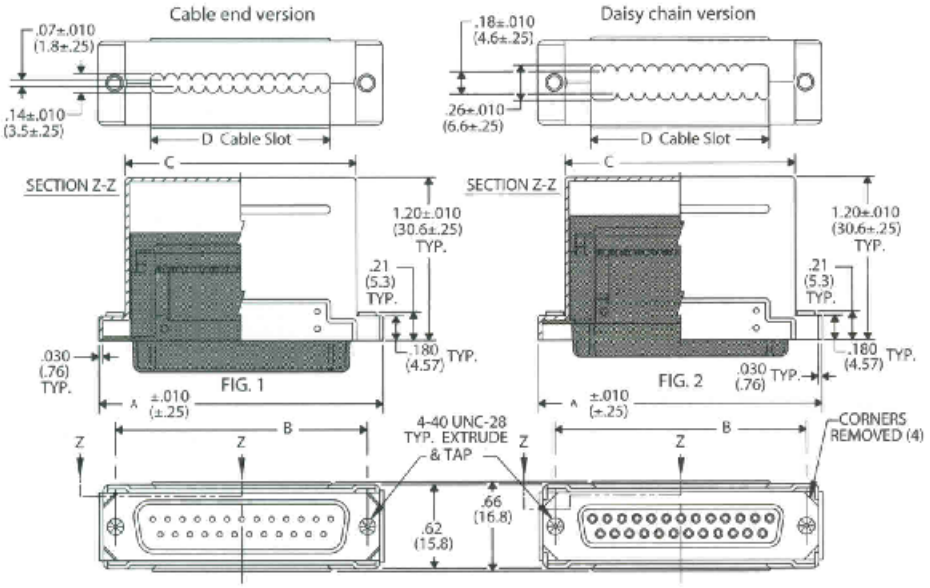

NO. CONTS.	A	B	C	D
9	1.284 (32.61)	.984 (24.99)	.830 (21.08)	.550 (13.97)
15	1.612 (40.94)	1.312 (33.32)	1.158 (29.41)	.856 (21.74)
25	2.152 (54.66)	1.852 (47.04)	1.698 (43.13)	1.366 (34.70)
37	2.800 (71.12)	2.500 (63.50)	2.346 (59.59)	1.978 (50.24)

Note: EMI/RFI shield will accept either pin or socket connector in standard (Fig. 1) or recessed (Fig. 2) mounting configurations, as shown.

Hardware Mounting Kits for Metal Faced D-Connectors

To order, specify CWN-HK-XX.

CWN-HK-07
Two 4-40 screws and washers for midspan splices of two CW D-Subminiature connectors with the CW EMI/RFI shield.

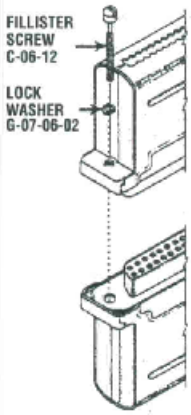

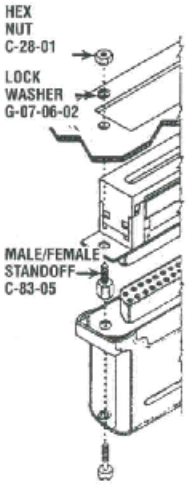

CWN-HK-08
Two 4-40 standoffs with lock washers and hex nuts for front panel mounting of D-Subminiature connector with metal face.

CWN-HK-09
Two 4-40 screws, lock washers and retaining clips for mounting other manufacturers' D-Subminiatures in the CW shield and mating to CWN-HK-10.

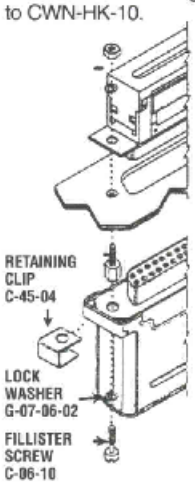

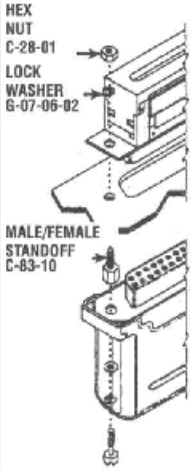

CWN-HK-10
Two 4-40 standoffs with lock washers and nuts for rear panel mounting of D-Subminiature connector with metal face.

CWN-HK-11
Two 4-40 screws, lock washers and four retaining clips for mid span splices of other manufacturers' D-Subminiature connectors in the CW shield.

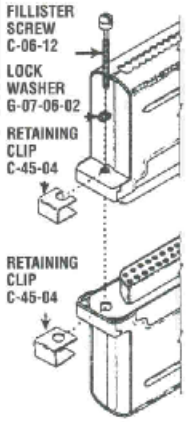

CWN-HK-12
Two 4-40 screws with four washers for mating CW D-Subminiature connectors with the CW EMI/RFI shield to front or rear panel mounted connector.
*Flat washer not used when mated with front panel mounted connector.

How to Order D-Subminiature Connectors with Metal Face

CWR-XXX-XX-00XX

Type of Connector
282=D-Subminiature with metal face for cable end terminations, pin contact (Standard)
283=D-Subminiature with metal face for cable end terminations, socket contact (Standard)
280=D-Subminiature connector with metal face for daisy chain applications, pin contact
281=D-Subminiature connector with metal face for daisy chain applications, socket contact

Number of Contacts
(9, 15, 25 or 37)

Plating
0021=30µ in. gold (in mating area) over 50µ in. nickel (standard)
0000=10µ in. gold (in mating area) over 50µ in. nickel
0022=50µ in. gold (in mating area) over 50µ in. nickel **Mil-DTL-24308 approved.**
0003=100µ in. tin-lead

How to Order EMI/RFI Shield

CWN-XXX-XX-8901

Type of Shield
292=Shield for cable end terminations
290=Shield for daisy chain terminations

Size
(09, 15, 25, 37)

Note: For information on 100% tested, ready-to-use cable assemblies, contact the factory or your local value-added distributor.

Card Edge Connectors

The card edge connector provides a fast means for connecting/disconnecting single, double-sided or multi-layer printed circuit boards.

Contact force consistency is obtained through the use of a long cantilevered contact having a minimum deflection angle and an extended self-cleaning, wiping action. These contacts ensure positive connection to the board, even when pad surfaces are irregular.

Good contact pressure is maintained with minimum wear on PC board pads, even in hostile environments, and after numerous insertions and withdrawals or shock and vibration.

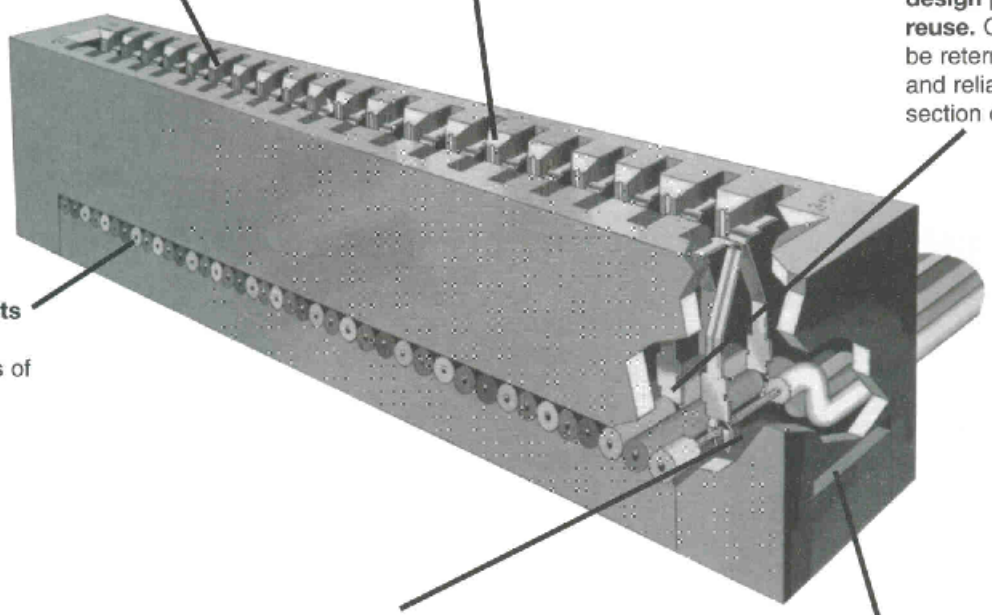

Contact

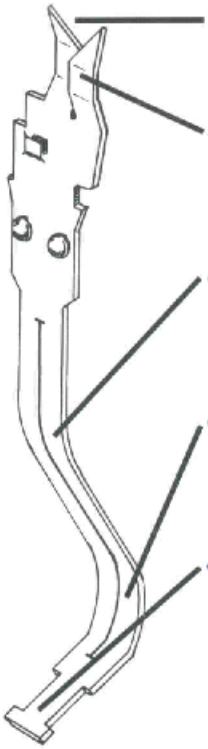

- **Lead-in on contact** helps align the conductor with the IDC slot.
- **Patented, offset tines** produce Torq-Tite™ termination for added reliability.
- **Long cantilever** produces less angular deflection as PC board is inserted.
- Contact with the PC board is made near the face of the connector for **increased wiping action.**
- **Unsupported contact tail allows for self-adjustment** to compensate for PC board irregularities.

Card Edge Connector Features

- 10, 20, 26, 34, 40, and 50 contact versions.
- Compatible with various PC board thicknesses, from .032 in. to .070 in. thick.
- Standard gold-plated phosphor bronze contacts; tin-lead plated contacts optional.
- Can be daisy-chained or applied in cable end terminations.
- Factory pre-assembled cover minimizes assembly time.
- Available with or without mounting flanges.
- Dependable long cantilever contact design maintains consistent pressure even after repeated matings with PC boards. Insures a long insertion/withdrawal cycle life and a good self-cleaning wipe on each PC board pad.
- Self-adjusting contact compensates for variations in PC board thickness.
- Closed entry protection prevents possible damage caused by PC board irregularities.

Strain Relief

Strain relief is an integral part of CW Card Edge connector. A strain relief lip is molded into the connector body. Upon installation of the cover, this lip causes a strain relief bend in the cable that prevents forces applied to the cable from being transferred to the IDC termination.

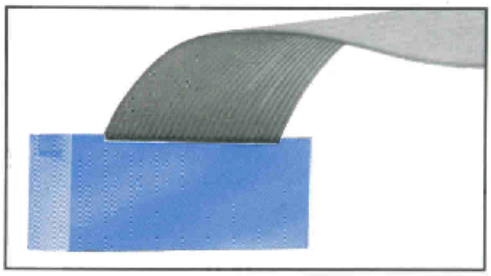

Polarization

Positive polarization is available on all CW card edge connectors. A polarizing key, inserted into a V-slot located between any two contacts, fits into a corresponding .037 in. slot cut into the PC board. This technique not only provides positive polarization without loss of a contact position, but also helps ensure precise alignment of the contacts to the PC board's pads.

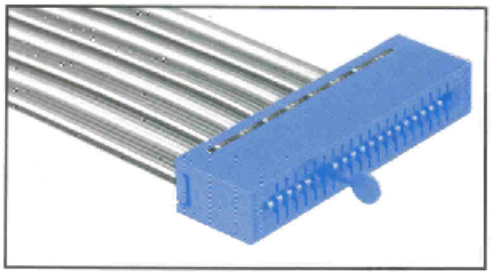

Assembly

Assembling these connectors is both fast and easy using only a simple bench press. The connector body is designed to orient the cable to the contact tines, and the factory preassembled cover permits termination of all conductors in one step–simply apply opposing parallel forces on the connector cover and base.

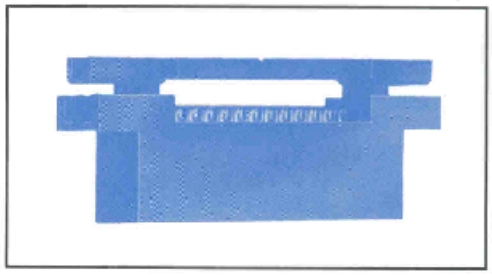

Card Edge Connectors

Engineering Dimensions

Dimensions

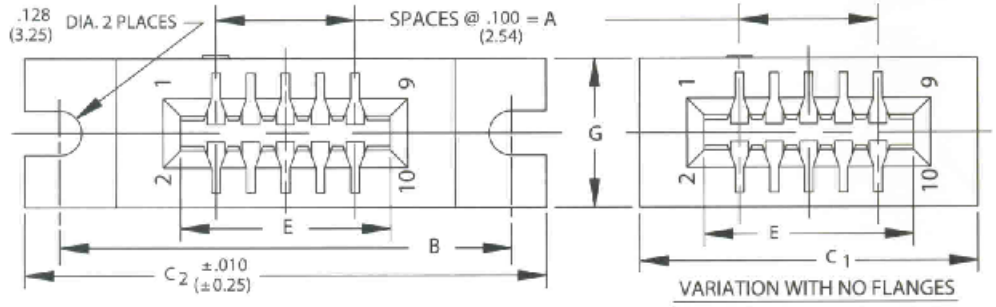

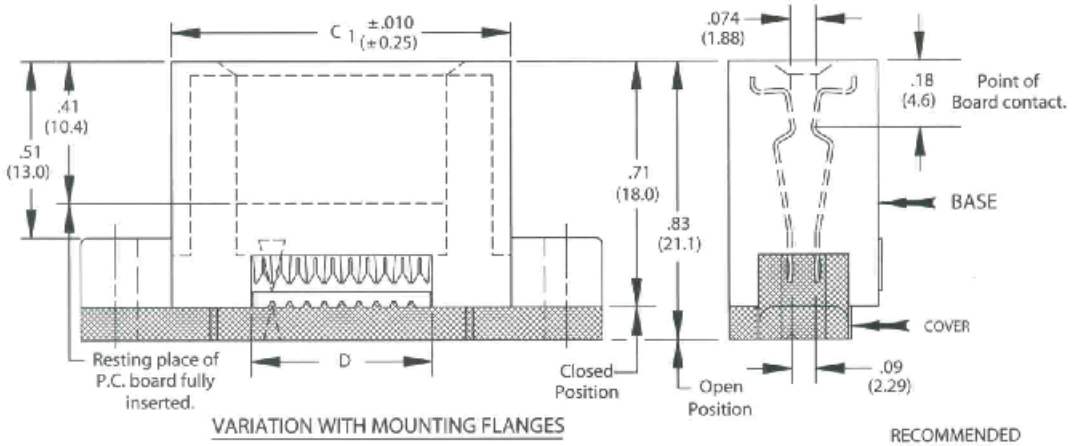

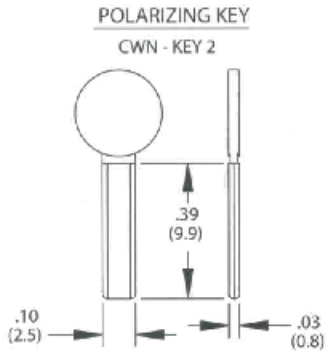

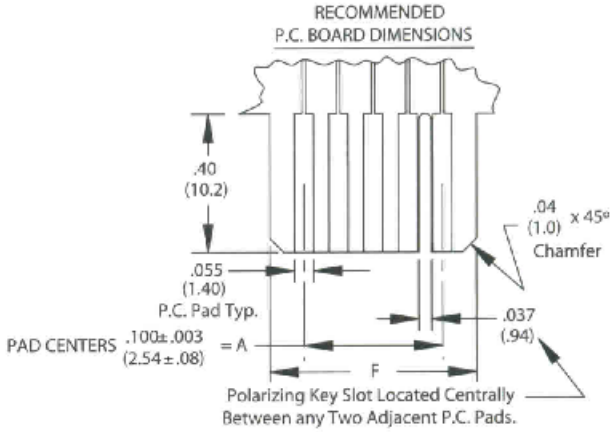

CONNECTOR DIMENSIONS								
NO. CONTS.	A	B	C_1	C_2	D	E	F	G
10	.400 (10.16)	1.300 (33.02)	.976 (24.79)	1.500 (38.10)	.520 (13.21)	.604 (15.34)	.596 (15.14)	.43 (10.9)
20	.900 (22.86)	1.800 (45.72)	1.476 (37.49)	2.000 (50.80)	1.020 (25.91)	1.104 (28.04)	1.096 (27.84)	.43 (10.9)
26	1.200 (30.48)	2.100 (53.34)	1.776 (45.11)	2.300 (58.42)	1.320 (33.53)	1.404 (35.66)	1.396 (35.46)	.43 (10.9)
34	1.600 (40.64)	2.500 (63.50)	2.176 (55.27)	2.700 (68.58)	1.720 (43.69)	1.804 (45.82)	1.796 (45.62)	.43 (10.9)
40	1.900 (48.26)	2.800 (71.12)	2.476 (62.89)	3.000 (76.20)	2.020 (51.31)	2.104 (53.44)	2.096 (53.24)	.43 (10.9)
50	2.400 (60.96)	3.400 (86.36)	2.976 (75.59)	3.900 (99.06)	2.520 (64.01)	2.604 (66.14)	2.596 (65.94)	.44 (11.2)

Specifications and Ordering Information

Specifications

- Contacts: phosphor bronze standard.
- Contact Plating: 30µ in. gold (in mating area) over 50µ in. nickel, standard; 10µ in. gold (in mating area) over 50µ in. nickel, optional; 50µ in. gold (in mating area) over 50µ in. nickel, optional; 100µ in. tin-lead optional
- Insulator Material: UL 94V-0 flame - retardant thermoplastic
- Color: blue
- Operating temperature: -55º to +125ºC
- Current Rating: 1A(maximum) per contact
- Dielectric Withstand Voltage: greater than 500 Vdc at sea level
- Insulation Resistance: greater than 5 x 10^9 ohms
- Cover pull-off force 8 oz/contact min. (force along contacts' primary axes)

How to Order Card Edge Connectors

CWR-XXX-XX-00XX

Type of Connector
170=Card edge connector without mounting ears
171=Card edge connector with mounting ears

Number of Contacts
(10, 20, 26, 34, 40, or 50)

Plating
0021=30µ in. gold (in mating area) over 50µ in. nickel (standard)
0000=10µ in. gold (in mating area) over 50µ in. nickel
0055=50µ in. gold (in mating area) over 50µ in. nickel
0003=100µ in. tin-lead

How to Order Card Edge Cable Assemblies

Cable assemblies with two card edge connectors on a prescribed length of gray flat cable are available with the connectors oriented per drawing 27-1. (#1 contacts oriented to red conductor.)
For other lengths, orientations, numbers or combinations of connectors,contact your local value - added distributor.

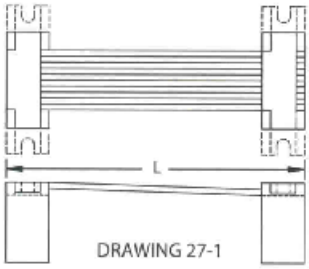

DRAWING 27-1

CA-XX-9X0X

Number of Conductors
(10, 20, 26, 34, 40, 50)

Final assembly length "L"
1=3"±1/8"
2=6"±1/8"
3=12"±1/4"
4=24"±1/4"
5=48"±1/4"

Type of Connector
4=card edge connectors without mounting ears. CWR-170-XX-0021 (See drawing 27-1)
5=card edge connectors with mounting ears CWR-171-XX-0021 (See drawing 27-1)

DIP Connectors

The CW Dual-In-Line Plug (DIP) connector is used for rapid, permanent connection of ribbon cable to a PC board or to a standard DIP socket when connect/disconnect capabilities are required. The cover is factory preassembled to the connector base to simplify assembly to cable and has ridges for cable alignment. CW DIP connectors are Mil-DTL-83503/6 approved.

- **Beveled corner** on cover and base at pin #1 provides orientation and contact identification.
- **No special cable preparation** required. Factory preassembled cover minimizes assembly time. Cable is inserted and terminated in one simple step.
- **No alignment tools required.** Cable fits snugly between base's cover-support posts, and is guided into position by ridges molded into inner surface of cover.

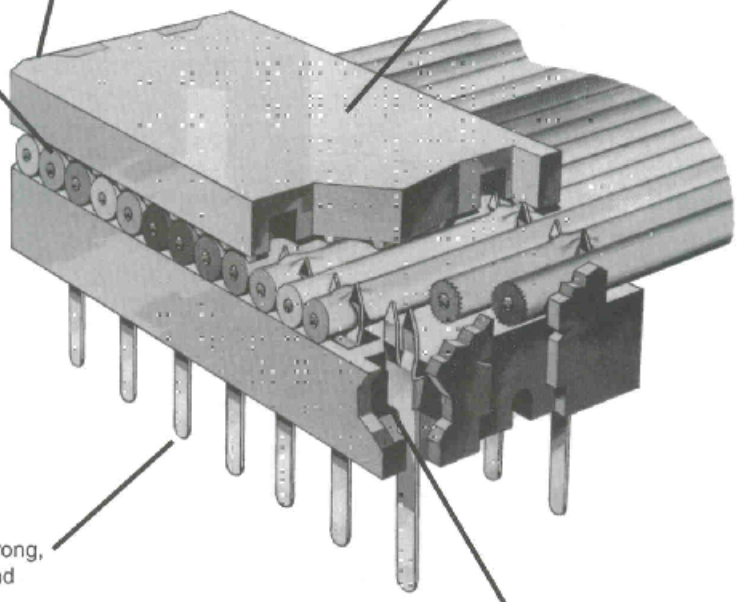

- **Sturdy terminal posts** are strong, yet flexible enough to withstand occasional bending and straightening without fatigue.
- **No "bare shoulders".** No exposure of unnecessary sections of the contact and possible shorting at the PC board interface.

Contact

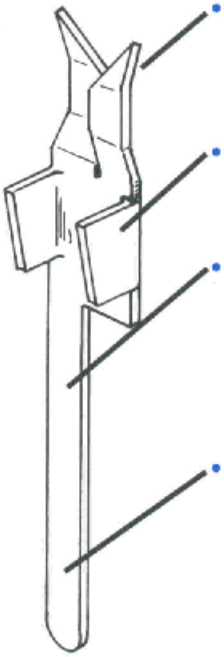

- **Patented offset tines** produce Torq-Tite™ termination for added reliability.
- **Double barbs bite** into plastic, retaining contact firmly in insulator.
- Spring-temper phosphor bronze contact material **resists breakage during bending or straightening operations.**
- **Two tail lengths are available** for use with standard or low profile DIP sockets. .012 in. x .021 in. contact cross-section provides proper mating with a variety of DIP sockets.

DIP Connector Features

- Mil-DTL-83503/6 approved
- One-piece construction.
- 14, 16, 24,and 40 pin versions.
- Patented Torq-Tite™ contacts, ensure reliable gas-tight terminations.
- Gold-plated phosphor bronze contacts, standard tin-lead plated contacts optional.
- Accepts 28-30 AWG stranded or solid conductors.
- Simple assembly – bench press or low cost hand tool is all that's needed for terminating cable and connectors.
- All pin numbers clearly marked and legible before and after assembly. Numbering is arranged to meet MIL-DTL-83503 specifications for standard IC DIP numbering.
- Optional strain relief clips are easily installed. Allows top center, vertical cable routing to reduce possibility of damage to contact pins during removal of DIP from socket.
- Two contact tail lengths available — .175 in. standard or optional 130 in. length for mating with low profile Dip Sockets.

Strain Relief

Optional metal strain relief straps are available. Connection is isolated from mechanical strain by the bend in the cable, as it is folded over the top of the assembled connector. The Strain Relief Strap is placed over the cable and snaps into a recess on the connector. A centralized top cable exit is created in the finished cable assembly.

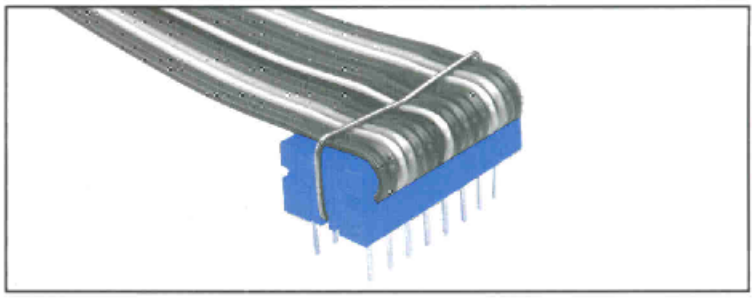

Contact Identification

Every contact position is numbered, per Mil-DTL-83503, for easy identification. In addition, a beveled corner at pin #1 enhances orientation of the connector to the mating DIP Socket, even in blind installations.

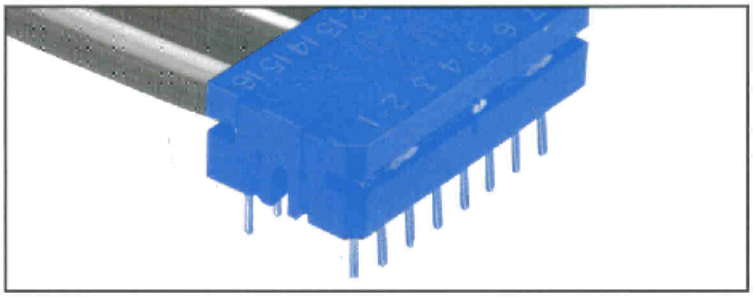

Assembly

The CT200 DIP Hand Tool is designed to terminate out 14 and 16 pin DIP Connectors. It is easy to use, lightweight and compact, making it an ideal tool for field replacement work or low volume assembly applications. DIP connectors can also be assembled to cable using CW's CT301 76/84 Bench Press.

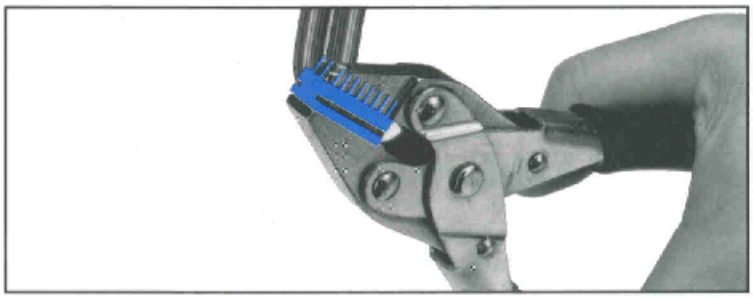

DIP Connectors

Engineering Dimensions

Dimensions

14/16 Pin DIP Connector

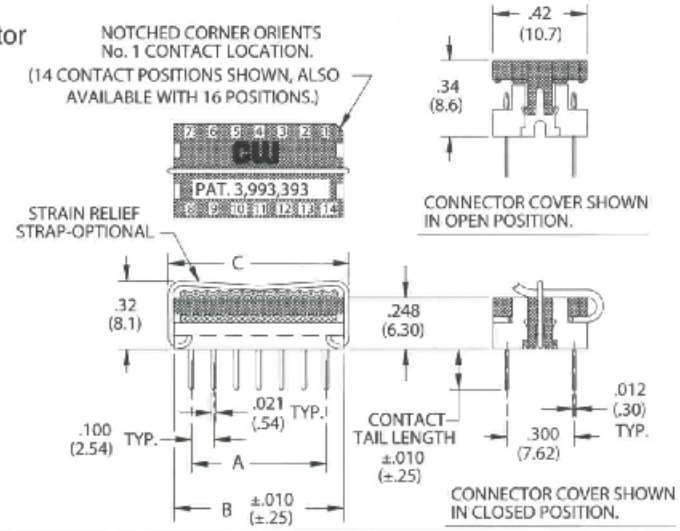

CONNECTOR DIMENSIONS			
NO. OF CONTACTS	A	B	C
14	.60 (15.2)	.754 (19.2)	.81 (20.6)
16	.70 (17.8)	.854 (21.7)	.91 (23.1)

24 Pin DIP Connector

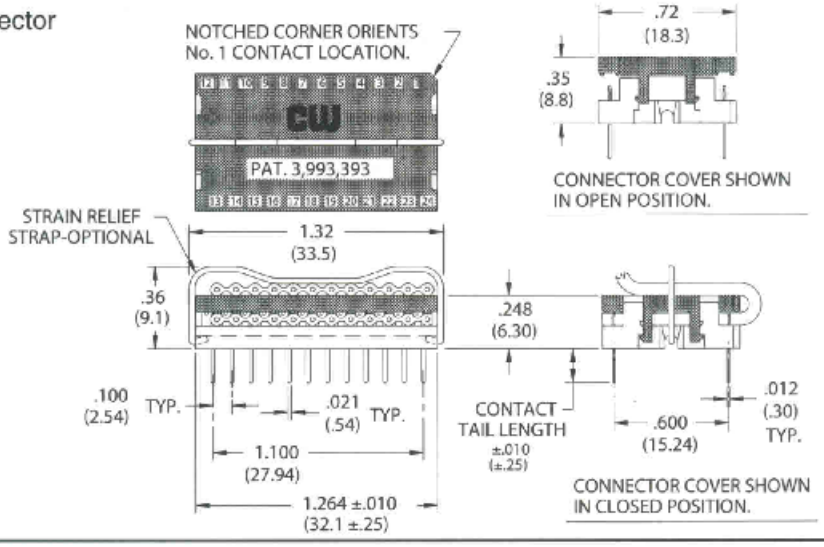

40 Pin DIP Connector

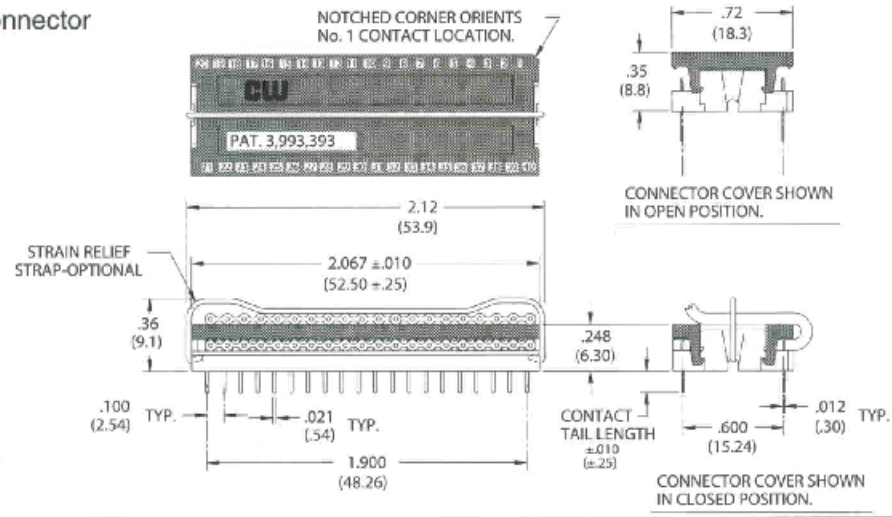

Specifications and Ordering Information

Specifications

- Contacts: phosphor bronze standard.
- Contact Plating: 10µ in. gold over 50µ in. nickel, standard; 30µ in. gold over 50µ in. nickel, optional; 50µ in. gold over 50µ in. nickel, optional; 100µ in. tin-lead optional
- Insulator Material: UL 94V-0 flame - retardant glass filled thermoplastic
- Strain Relief Strap Material: tin-plated steel
- Color: blue
- Operating temperature: -55ºC to +125ºC
- Current Rating: 1A (maximum) per contact
- Dielectric Withstand Voltage: Greater than 500 Vdc at sea level
- Insulation Resistance: Greater than 5 x 10^9 ohms
- Mates with .050 in. centered round conductor flat cable and standard DIP socket with .100 in. x .300 in. or .100 in. x .600 in. contact spacing
- Cover pull off force, with strain relief 20 lb minimum (force along contacts' primary axes)

How to Order DIP Connectors

CWR-XXX-XX-XXXX

Type of Connector
Standard tail length .175" = 130
Optional tail length .130" = 134

Number of Contacts
(14, 16, 24 or 40)

Plating
0000=10µ in. gold over 50µ in. nickel (standard)
0001=30µ in. gold over 50µ in. nickel
0002=50µ in. gold over 50µ in. nickel Mil-DTL-83503/6 approved. (CWR-130-14, 16, 24 only)
0003=100µ in. tin-lead

EXAMPLE: CWR-130-16-0002 is part number for a 16-pin DIP connector with .175 in. tails and 50µ in. gold over 50µ in. nickel contacts

How to Order DIP Cable Assemblies

Cable assemblies with two DIP connectors (CWR-130-XX-0000) on a prescribed length of gray flat cable are available with connectors oriented per drawing 31-1. (#1 contacts oriented to red conductor.)
For other lengths, orientations, numbers or combinations of connectors, contact the factory or your local value-added distributor.

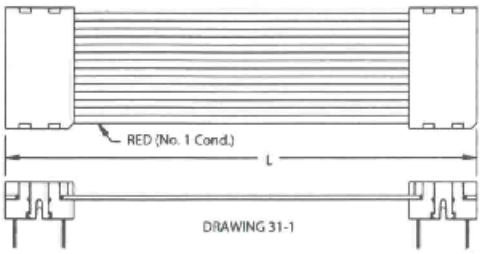

CA-XX-910X

Number of Conductors
(14, 16, 24 or 40)

Final assembly length "L"
1=3"±1/8"
2=6"±1/8"
3=12"±1/4"
4=24"±1/4"
5=48"±1/4"

How to Order Strain Relief Straps for DIP Connectors

EXAMPLE: Strain Relief Strap part number for 24-pin DIP Connector is CWN-SR-24

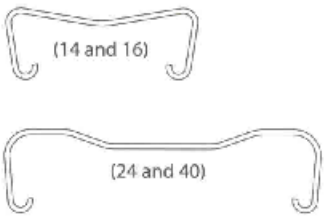

CWN-SR-XX

Connector Size
(14, 16, 24 or 40)

PCB Connectors

The PCB connector is used when a permanent connection of flat cable to the PC board is required. The cable is terminated to the PCB connector making a reliable gas-tight connection with CW's patented Torq-Tite™ contacts. The connector's pins are then soldered to the board.

CW's PCB connectors are approved by the U.S. Defense Department and are qualified to Mil-DTL-83503/23.

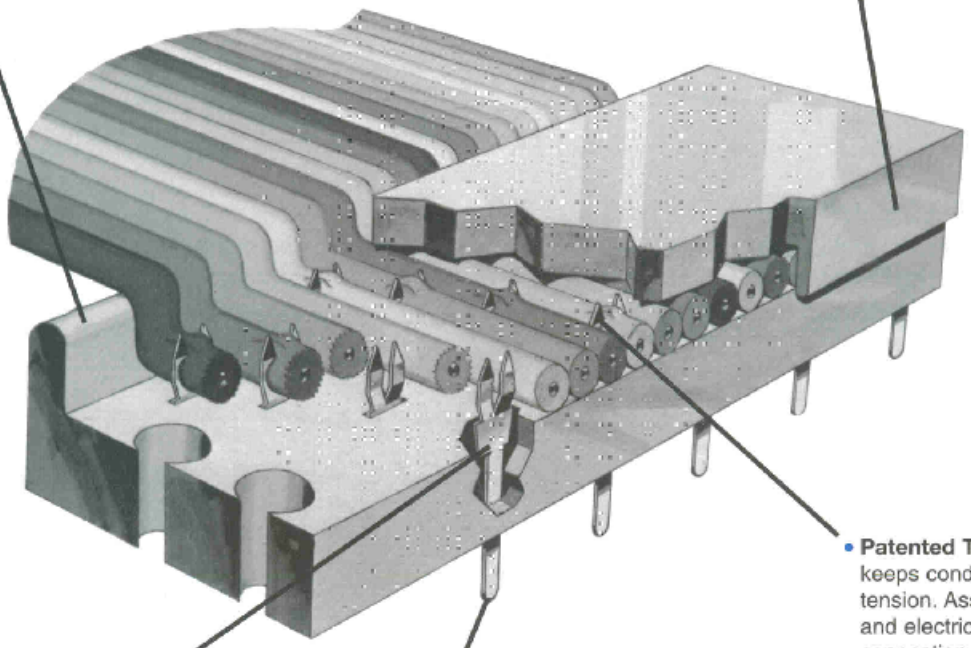

Contact

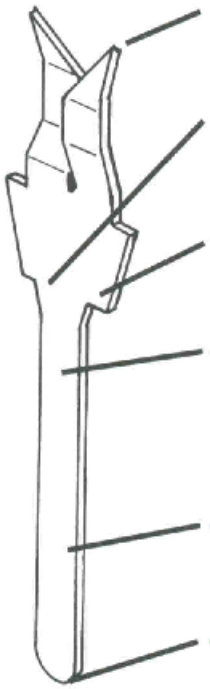

- **Sharp points** allow contact to pierce tough insulation materials
- **Contact tines are firmly connected** to the body of the contact
- **No "bare shoulders"** on the contact at the PC board interface.
- Spring temper, phosphor bronze material **resists breakage during bending or straightening operations**
- **One tail length** can be used with 1/8 in. or 1/16 in. PC boards
- **Rounded tip provides lead-in** to mate with PC board holes

PCB Connector Features

- 10, 20, 26, 34, 40, 50, 60, pin versions
- Tin-lead plating, standard; gold plating also available
- Available with or without strain relief lip
- Available with or without cover lip for cable end or daisy chain application
- Rugged, lightweight UL 94V-0 thermoplastic construction
- Accepts 28-30 AWG stranded or solid conductors

Strain Relief

A molded-in strain relief is an optional feature on CW PCB connectors. (Specify CWR-140 or CWR-143 series). This lip, upon installation of the cover, creates a strain relief bend in the cable, inhibiting the transfer of any tension on the cable to the contact lines.

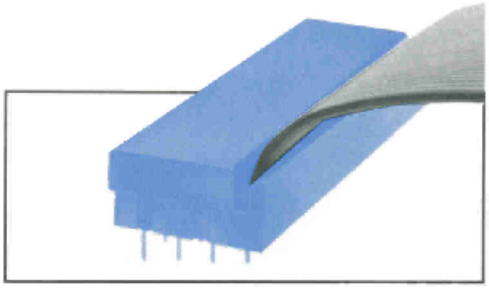

Cover Lip

For additional protection on cable end terminations, the CW PCB connector is available with a cover lip to insulate the ends of the cable's conductors. This eliminates possible "shorts" and allows you to position connectors more closely on your PC board. (Specify CWR-140 or CWR-141 series).

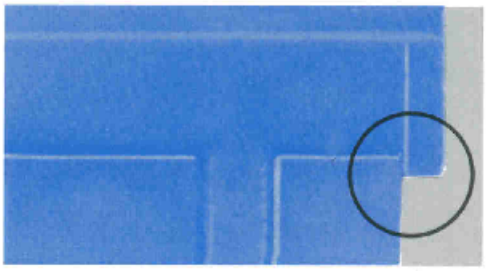

Assembly

To terminate CW PCB connectors to flat cable, use CT301 86/81 assembly press. The cable is applied directly to the IDC contacts in the connector base and then the cover is assembled.

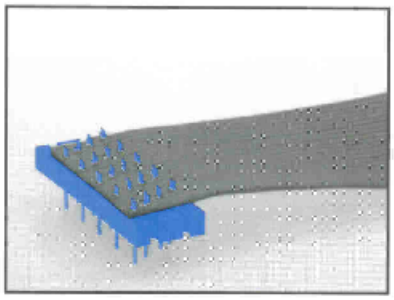

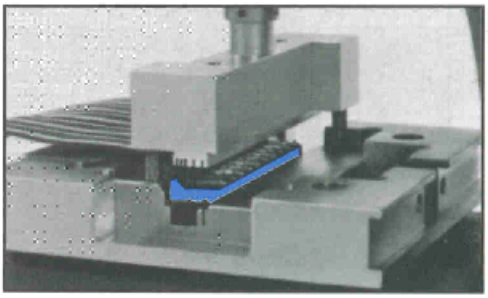

PCB Connectors

Engineering Dimensions

Dimensions

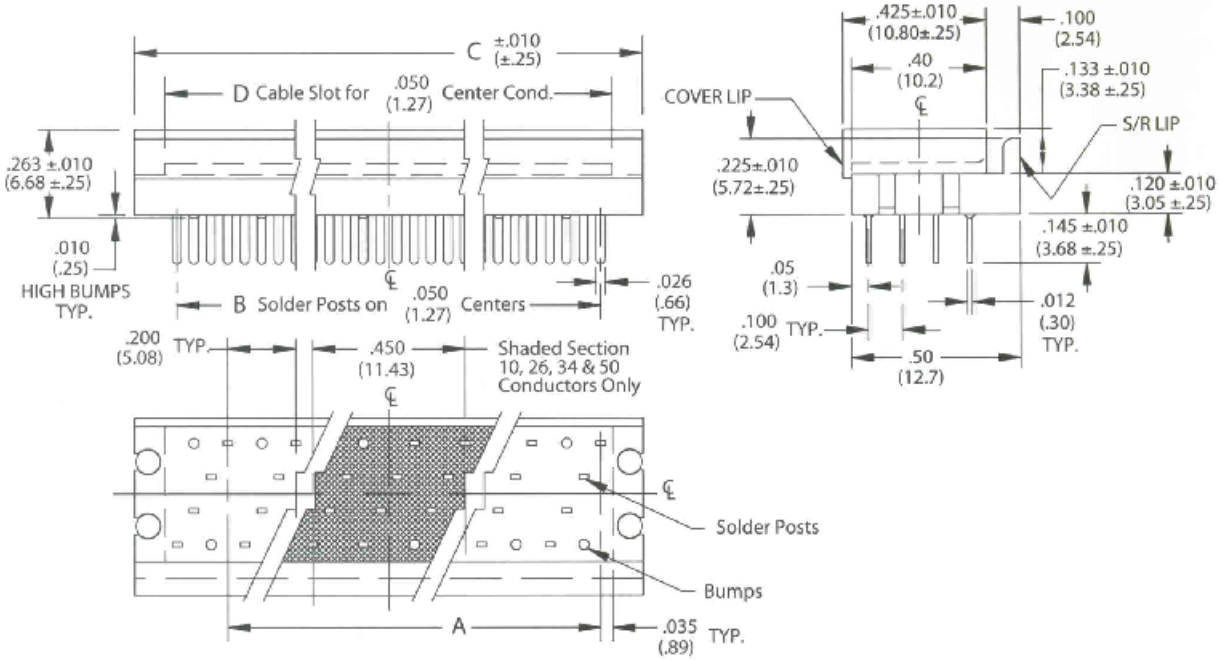

CONNECTOR DIMENSIONS				
No. Of Contacts	A	B	C	D
10	——	.450 (11.43)	.700 (17.78)	.520 (13.21)
20	.800 (20.32)	.950 (24.13)	1.200 (30.48)	1.020 (25.91)
26	1.100 (27.94)	1.250 (31.75)	1.500 (38.10)	1.320 (33.53)
34	1.500 (38.10)	1.650 (41.91)	1.900 (48.26)	1.720 (43.69)
40	1.800 (45.72)	1.950 (49.53)	2.200 (55.88)	2.020 (51.31)
50	2.300 (58.42)	2.450 (62.23)	2.700 (68.58)	2.520 (64.01)
60	2.800 (71.12)	2.950 (74.93)	3.200 (81.28)	3.020 (76.71)

Part No.	S/R LIP	COVER LIP
CWR-140	YES	YES
CWR-141	NO	YES
CWR-142	NO	NO
CWR-143	YES	NO

Specifications and Ordering Information

Specifications

- Contacts: phosphor bronze standard
- Contact Plating: 100µ in. tin-lead, standard; 10µ in. gold over 50µ in. nickel, optional; 30µ in. gold over 50µ in. nickel, optional; 50µ in. gold over 50µ in. nickel, optional; 200µ in. tin-lead, optional
- Insulator Material: UL 94V-0 flame - retardant thermoplastic
- Color: blue
- Operating temperature: -55ºC to +125ºC
- Current Rating: 1A (maximum) per contact
- Dielectric Withstand Voltage: greater than 500 Vdc at sea level
- Insulation Resistance: greater than 5 x 10^9 ohms
- Cover pull-off force, without strain relief, 15 lb min. (force along contacts' primary axes)

How to Order PCB Connectors

CWR-XXX-XX-00XX

Type of Connector
142 = A PCB connector without strain relief for daisy chain termination (standard)
140 = A PCB connector with strain relief and cover lip for cable end terminations
141 = A PCB connector without strain relief and with cover lip for cable end terminations
143 = A PCB connector with strain relief for daisy chain termination

Number of contacts
(10, 20, 26, 34, 40, 50 or 60)

Plating
0003= 100µ in. tin-lead (standard)
0000= 10µ in. gold over 50µ in. nickel
0001= 30µ in. gold over 50µ in. nickel
0047= 50µ in. gold over 50µ in. nickel
0042= 100µ in. tin-lead
Mil-DTL-83503/23 approved
(CWR-142-10 through 50 only)

How to Order PCB Cable Assemblies

Cable assemblies with two PCB Connectors, CWR-142-XX-0003, on a prescribed length of gray flat cable are available with the connectors oriented per drawing 35-1. (#1 contacts oriented to red conductor.) For other lengths, orientations, numbers or combinations of connectors, contact the factory or your local value-added distributor.

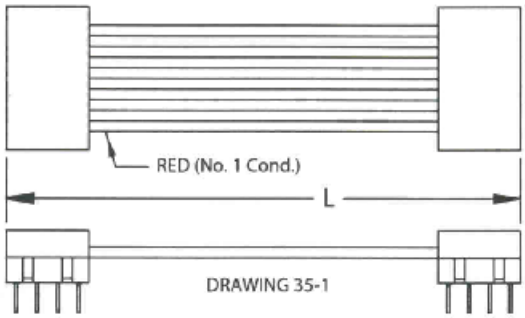

CA-XX-990X

Number of conductors
(10, 20, 26, 30, 40, 50, or 60)

Final assembly length "L"
1=3"±1/8"
2=6"±1/8"
3=12"±1/4"
4=24"±1/4"
5=48"±1/4"

Flat Cable

Flat Cable

The following types of Flat Cable having conductors on .050 in. centers are available from CW Industries:

- Extruded Gray Cable for general use.
- Color-Coded Cable, bonded.
- Jacketed and Shielded Flat Cable for applications where circuitry requires EMI/RFI Shielding and/or protection from mechanical and physical abuse.
- Ground plane cable for high speed signal transmission in computers and electrical equipment.

All CW cables are UL listed, pass the UL VW-1 flame test,, and mate with insulation displacement connectors on .050 in. centers.

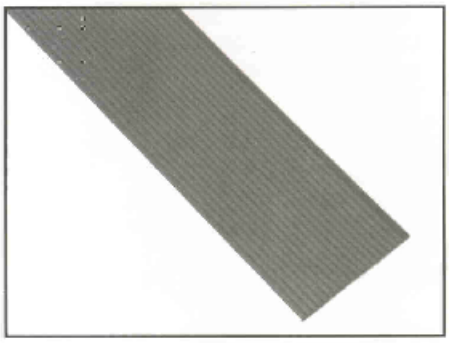

Extruded Gray Cable – 105ºC PVC

CW's gray flat cable is designed for basic, general purpose applications. It combines low cost with consistently reliable performance. Mirror image profile permits reverse plane termination on the same cable length. Flexibility and excellent teardown characteristics allow intricate circuit routing and uniform breakouts for harness production.

Description

- 28 AWG (7/36) stranded tinned copper conductor
- Nominal Insulation Thickness: .010in (.25 mm) PVC
- Conductors on .050 in. (1.27 mm) centers
- Gray PVC with red stripe on leading edge
- UL listed – Style 2651
- Passes UL VW-1

Characteristics

- Temperature Rating: 105ºC
- Voltage Rating: 300 Volts
- Capacitance: 14 pF/ft nom.*
- Propagation Delay: 1.4 ns/ft (nom.)
- Impedance: 105 ohms nom.*
- Crosstalk: nom. between two adjacent single lines @ 1 ns rise time over 10 ft (3.05 M) length; near end 3.2% –far end 11.5%*

Special Constructions

- 30 AWG solid, tinned copper conductors available.
- Tin overcoated, stranded conductor available.

*Transmission Characteristics:
Ground-signal-ground-signal, etc. with all grounds common.

CW P/N	No. of Conductors	Nominal Overall Width (W) Inches	(mm)	Nominal Span (S) Inches	(mm)
C-03-000-9	9	.45	(11.43)	.40	(10.16)
C-03-000-10	10	.50	(12.70)	.45	(11.43)
C-03-000-14	14	.70	(17.78)	.65	(16.51)
C-03-000-15	15	.75	(19.05)	.70	(17.78)
C-03-000-16	16	.80	(20.32)	.75	(19.05)
C-03-000-20	20	1.00	(25.40)	.95	(24.13)
C-03-000-24	24	1.20	(30.48)	1.15	(29.21)
C-03-000-25	25	1.25	(31.75)	1.20	(30.48)
C-03-000-26	26	1.30	(33.02)	1.25	(31.75)
C-03-000-34	34	1.70	(43.18)	1.65	(41.91)
C-03-000-37	37	1.85	(46.99)	1.80	(45.72)
C-03-000-40	40	2.00	(50.80)	1.95	(49.53)
C-03-000-50	50	2.50	(63.50)	2.45	(62.23)
C-03-000-60	60	3.00	(76.20)	2.95	(74.93)

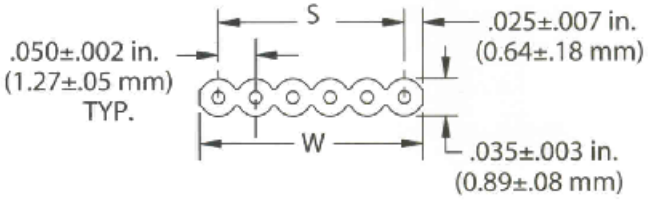

Color-Coded Cable

CW's Color-Coded Cable is manufactured from pre-insulated color-coded conductors which are then bonded on .050 in. center to center spacing. This permits conventional termination using insulation displacement connectors. Color coding affords immediate identification of discrete wires for positive termination and traceability.

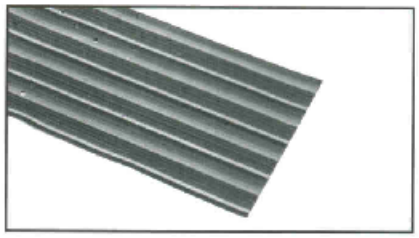

Description

- 28 AWG (7/36) stranded tinned copper conductor
- Color Code: brown, red, orange, yellow, green, blue, violet, gray, white, black. Color code repeats beyond 10 conductors.
- UL listed–Style 2693
- Passes UL VW-1

Bonded UL Style 20029

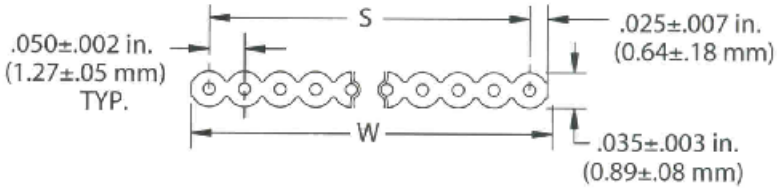

Characteristics

- Temperature Rating: 105ºC
- Voltage Rating: 300 Volts
- Capacitance: 15 pF/ft nom.
- Propagation Delay: 1.4 ns/ft (nom.)
- Impedance: 100 ohms nom.*

Bonded P/N	No. of Conductors	Nominal Overall Width (W) Inches	(mm)	Nominal Span (S) Inches	(mm)
C-03-006-9	9	.45	(11.43)	.40	(10.16)
C-03-006-10	10	.50	(12.70)	.45	(11.43)
C-03-006-14	14	.70	(17.78)	.65	(16.51)
C-03-006-15	15	.75	(19.05)	.70	(17.78)
C-03-006-16	16	.80	(20.32)	.75	(19.05)
C-03-006-20	20	1.00	(25.40)	.95	(24.13)
C-03-006-24	24	1.20	(30.48)	1.15	(29.21)
C-03-006-25	25	1.25	(31.75)	1.20	(30.48)
C-03-006-26	26	1.30	(33.02)	1.25	(31.75)
C-03-006-34	34	1.70	(43.18)	1.65	(41.91)
C-03-006-37	37	1.85	(46.99)	1.80	(45.72)
C-03-006-40	40	2.00	(50.80)	1.95	(49.53)
C-03-006-50	50	2.50	(63.50)	2.45	(62.23)
C-03-006-60	60	3.00	(76.20)	2.95	(74.93)

Special Constructions

- Tin overcoated stranded conductor, available.
- CSA listed cable available.
- Other color combinations available.
- Intermittent Bond Cable available.

*Transmission Characteristics: Ground-signal-ground-signal, etc. with all grounds common.

Assembly Tools

Complete Assembly Press Kit

The CT304 Assembly Press Kit consists of a rugged, yet lightweight, cast aluminum frame and a variety of interchangeable upper and lower dies, each specifically designed to provide high-speed termination of one or more types of CW IDC connectors. The interchangeable lower and upper dies can be aligned in either of two perpendicular directions for cable end or daisy chain applications. An adjustable cable guide aligns the cable squarely in the connector with the dies in either position. The handle of the assembly press provides a mechanical advantage of 25:1 to minimize operator fatigue. The handle's travel can be adjusted to accommodate varying connectors and assembly operations by raising or lowering the upper die holding screw–one full turn equals a .050 in., vertical height adjustment. Also, a spring-loaded plunger allows the handle to rest in any convenient position–at mid stroke, either end, or anywhere in between.

The CT304 Assembly Press Kit includes a CT301 press and the six dies listed in the chart at the right. All CW connectors shown in this catalog, as well as many made by other manufacturers, can be terminated to flat cable having conductors on .050 in. centers using this equipment.

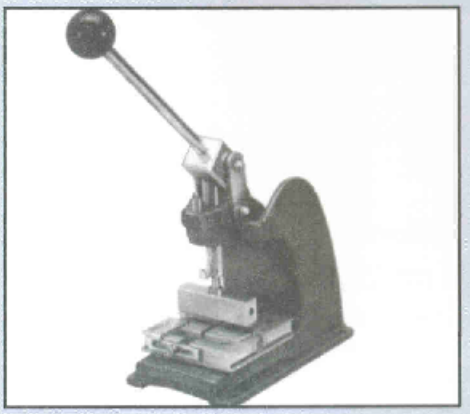

Assembly Press & Dies

Each part of the assembly press kit can be ordered individually. The CT301 includes only the press, the nest to hold any of the lower assembly dies, a cable guide and an upper die holding screw which will accept any of our standard upper dies. The specific upper and lower dies required for a particular assembly operation can be ordered from the chart at the right.

To designate the CT301 press with a specific combination of upper and lower dies, such as CT 34-76 and CT 34-84, call out CT301-76/84.

For detailed assembly instructions, contact the factory or your local CW Value-Added Distributor.

Connector	Upper Die Required	Lower Die Required
CWR-130/134 DIP	CT-34-76	CT-34-84
CWR-170/171 CARD EDGE	CT-34-76	CT-34-89
CWR-180/181/182/183/280/281/282/283 D-SUBMINIATURE	CT-34-76	CT-34-89
CWR-210/217/220/227 SOCKET	CT-34-76	CT-34-80
CWR-140/141/142/143 PCB	CT-34-76	CF-150

To prepare shielded and jacketed cable for use with CW's metal-faced D-subminiature and EMI/RFI shield, specify the CT-34-33 tool in the 9, 15, 25 or 37 conductor size.

For information describing automatic connector assembly equipment, please contact the factory.

DIP Hand Tool

The CT200 DIP Hand Tool is designed to terminate CW 14 and 16 pin DIP connectors and is ideal for field repair or replacement. It is also adapted for use in assembling CWN-HK-05 and -06 hardware kits to D-Subminiatures connectors.

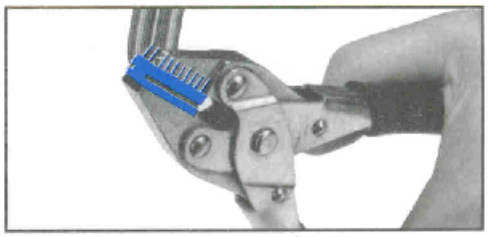

Header Rib Removal Tool

CT-34-32 R-R Finishing Tool allows you to readily remove header polarizing ribs whenever polarization is not required. Simply slip the tool over one of the ribs in the header and rotate it 150º. The CT-34-32 tool can also be used to assemble the retaining ring in hardware kits CWN-HK-01 and CWN-HK-03 to a D-Subminiature connector.

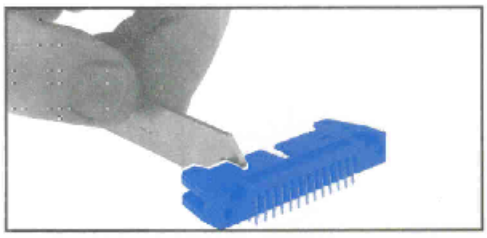

Significance of Mil-DTL-83503 and Mil-DTL-24308 Approvals

Procurement agencies of the United States government purchase vast quantities and types of electrical and electronic military gear for use by The Department of Defense and its many branches. Because of the obvious need for reliability of military equipment, specifications have been developed to define minimum acceptable performance standards for components used in this equipment. Those components that meet the performance standards and physical parameters defined in these specifications are placed on a Government prepared "Qualified Products List" (QPL); and they remain on this list provided ongoing and continuing "acceptance" tests indicate that the product continues to meet the specification requirements.

The Qualified Products List for Mil-DTL-83503 (the general specification for multi-contact, electrical connectors for terminating flexible flat cable) is established and maintained by the Defense Electronics Supply Center, Dayton, Ohio as agent for the Air Force Acquisition Logistics Division (AFALD-PTS) Gentile Air Force Station, Ohio.

CW has been involved with Mil-DTL-83503 from the outset. Our engineers helped the Department of Defense establish the standards and our IDCs were among the first placed on the QPL.

Our government-certified testing facilities constantly evaluate production connectors in keeping with Mil-DTL-83503.

Mil-DTL-83503 establishes the physical, material, and performance standards for IDCs purchased for military use. These include physical dimensions, materials of construction, and performance standards–high and low temperature, thermal and mechanical shock, dielectric withstanding voltage, cable retention, contact retention, cable flexing, contact resistance, mating and unmating forces, durability, and others. The specifications also describe test methods used to determine component acceptability for each of these standards.

Standardization of IDCs has been promoted and supported by the requirements of Mil-DTL-83503. This specification has proven useful, not only by tending to increase the performance levels that IDC manufacturers strive to achieve, but by setting up general criteria that lead to predictable performance and interchangeability among various IDC types from various sources.

CW's position of leadership in the industry is a direct result of our leading role in the development of these standards.

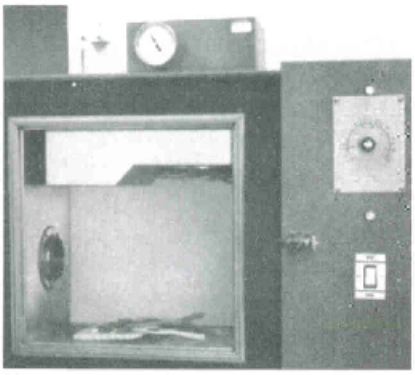

Temperature cycling from hot to cold

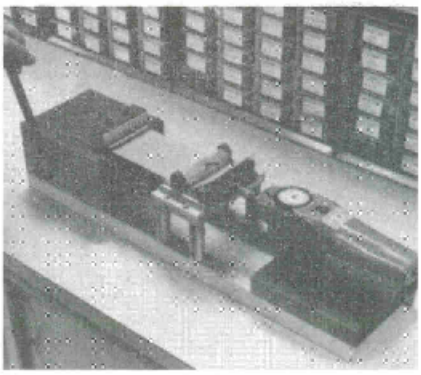

Test to determine the force for cover pull-off from base of connector

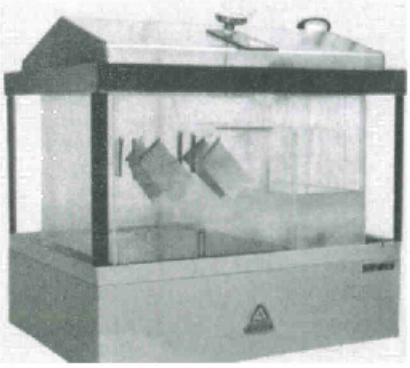

Exposure to a hostile salt spray environment

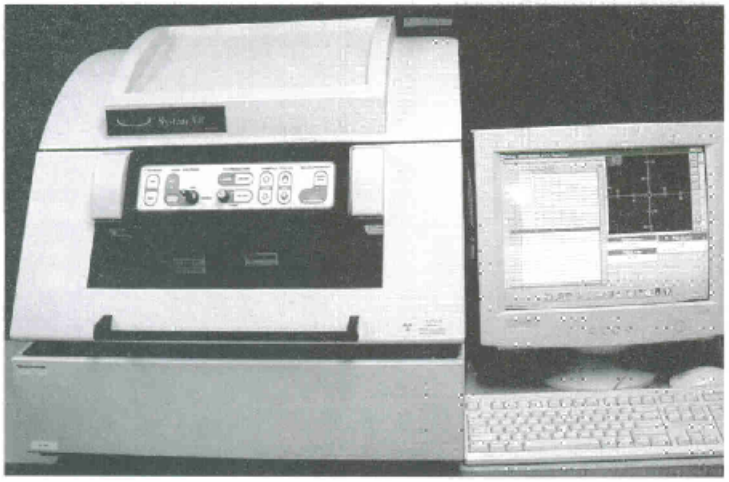

X-Ray Fluorescence Equipment is used to determine the precise thickness of Contact Plating

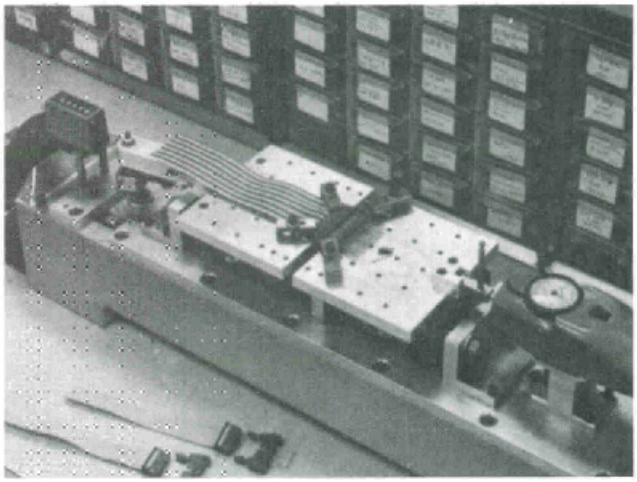

Measurements of insertion and withdrawal forces after 500 matings

Part Number Index

Connectors

Part Number	Page(s)
CWN-290	22-25
CWN-292	22-25
CWN-300	10-13
CWN-301	10-13
CWN-302	10-13
CWN-310	10-13
CWN-311	10-13
CWN-312	10-13
CWN-320	10-13
CWN-321	10-13
CWN-322	10-13
CWN-330	4, 10, 16, 17
CWN-331	10, 11, 16, 17
CWN-335	10, 11, 16, 17
CWN-336	10, 11, 16, 17
CWN-338	10, 11, 16, 17
CWN-350	10-13
CWN-351	10-13
CWN-352	10-13
CWN-360	10-13
CWN-361	10-13
CWN-362	10-13
CWN-370	10-13
CWN-371	10-13
CWN-372	10-13
CWN-400	10-13
CWN-401	10-13
CWN-402	10-13
CWN-410	10-13
CWN-411	10-13
CWN-412	10-13
CWN-420	10-13
CWN-421	10-13
CWN-422	10-13
CWN-430	10, 11, 16, 17
CWN-431	10, 11, 16, 17
CWN-435	10, 11, 16, 17
CWN-436	10, 11, 16, 17
CWN-438	10, 11, 16, 17
CWN-450	10-13
CWN-451	10-13
CWN-452	10-13
CWN-460	10-13
CWN-461	10-13
CWN-462	10-13
CWN-470	10-13
CWN-471	10-13
CWN-472	10-13
CWN-500	10, 11, 14, 15
CWN-501	10, 11, 14, 15
CWN-502	10, 11, 14, 15
CWN-510	10, 11, 14, 15
CWN-511	10, 11, 14, 15
CWN-512	10, 11, 14, 15
CWN-520	10, 11, 14, 15
CWN-521	10, 11, 14, 15
CWN-522	10, 11, 14, 15
CWN-530	10, 11, 14, 17
CWN-531	10, 11, 14, 17
CWN-535	10, 11, 14, 17
CWN-536	10, 11, 14, 17
CWN-538	10, 11, 14, 17
CWN-550	10, 11, 14, 15
CWN-551	10, 11, 14, 15
CWN-552	10, 11, 14, 15
CWN-560	10, 11, 14, 15
CWN-561	10, 11, 14, 15
CWN-562	10, 11, 14, 15
CWN-570	10, 11, 14, 15
CWN-571	10, 11, 14, 15
CWN-572	10, 11, 14, 15
CWN-600	10, 11, 14, 15
CWN-601	10, 11, 14, 15
CWN-602	10, 11, 14, 15
CWN-610	10, 11, 14, 15
CWN-611	10, 11, 14, 15
CWN-612	10, 11, 14, 15
CWN-620	10, 11, 14, 15
CWN-621	10, 11, 14, 15
CWN-622	10, 11, 14, 15
CWN-630	10, 11, 16, 17
CWN-631	10, 11, 16, 17
CWN-635	10, 11, 16, 17
CWN-636	10, 11, 16, 17
CWN-638	10, 11, 16, 17
CWN-650	10, 11, 14, 15
CWN-651	10, 11, 14, 15
CWN-652	10, 11, 14, 15
CWN-660	10, 11, 14, 15
CWN-661	10, 11, 14, 15
CWN-662	10, 11, 14, 15
CWN-670	10, 11, 14, 15
CWN-671	10, 11, 14, 15
CWN-672	10, 11, 14, 15
CWR-130	30-33
CWR-134	30-33
CWR-140	34-37
CWR-141	34-37
CWN-142	34-37
CWR-143	34-37
CWR-170	26-29
CWR-171	26-29
CWR-180	18-21
CWR-181	18-21
CWR-182	18-21
CWR-183	18-21
CWR-210	6-9
CWR-217	6-9
CWR-220	6-9
CWR-227	6-9
CWR-280	22-25
CWR-281	22-25
CWR-282	22-25
CWR-283	22-25

Cable

C-03-000	38
C-03-006	39

Cable Assemblies

CA-XX-910X	33
CA-XX-920X	9
CA-XX-930X	9
CA-XX-940X	29
CA-XX-950X	29
CA-XX-960X	21
CA-XX-970X	21
CA-XX-980X	21
CA-XX-990X	37

Accessories

CWN-HK-01 to 06	20
CWN-HK-07 to 12	25
CWN-KEY 1	7, 8
CWN-KEY 2	27, 28
CWN-SR-XX	31-33

Assembly Tools

CT-34-XX	40
CT-34-33-XX	40
CT-200	40
CT-301	40
CT-304	40

Notes

Notes

Other CW INDUSTRIES Products

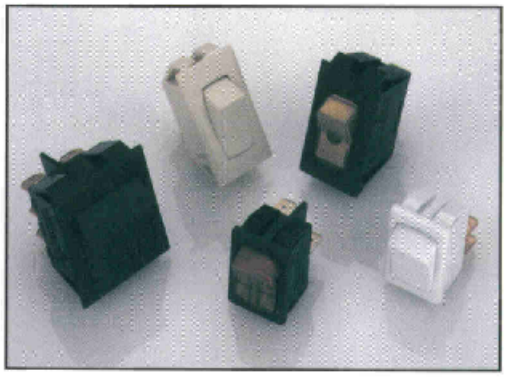

CW ROCKER & POWER SLIDE SWITCHES CATALOG

From miniature to standard full-sized switches, CW offers a comprehensive line of high-quality, attractively styled and very competitively priced rocker and power slide switches. We offer switches rated to 16A @ 125/250 Vac in circuitries ranging from SPST through DPDT, including center-off, spring-return, and illuminated versions. A variety of color, marking, and termination options are available. Our patented unique contact sliding and rotating action ensures contact cleanliness and extended life.

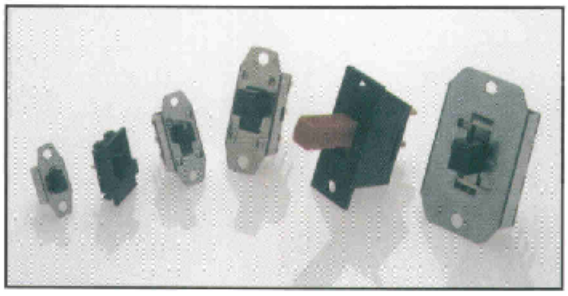

CW SLIDE SWITCH CATALOG

From micro-miniature, to miniature, and standard-sized slide switches, CW offers the most comprehensive line of slide switches for panel or PC board mounting. A wide variety of circuitry options is available ranging from one through four poles and one through five positions. Switches are available in .5 to 16A @ 125 Vac – including top, side, and end actuated designs. Custom cap and superstructure options make CW slide switches extremely versatile and attractive.

For More Information, Contact:

CW INDUSTRIES

130 James Way • Southampton, PA 18966 - 3838

Telephone: (215) 355-7080 • Fax: (215) 355-1088

www.cwind.com

05/04

Completely American Made

Printed in U.S.A.