	COUNT	DESCRIPTION OF REVISIONS	BY	CHKD	DATE		COUNT	DESCRIPTION OF REVISIONS	BY	CHKD	DATE
△					. .	△					. .
△					. .	△					. .
△					. .	△					. .

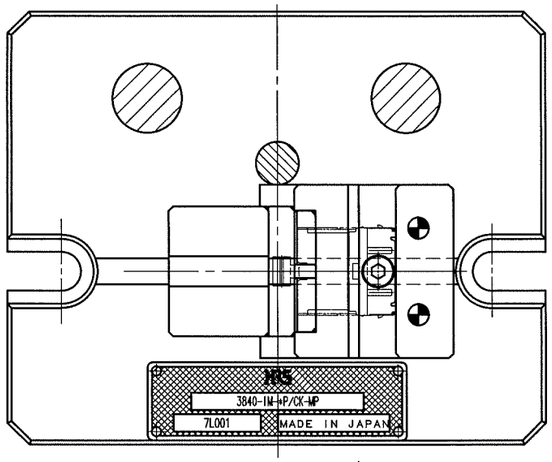

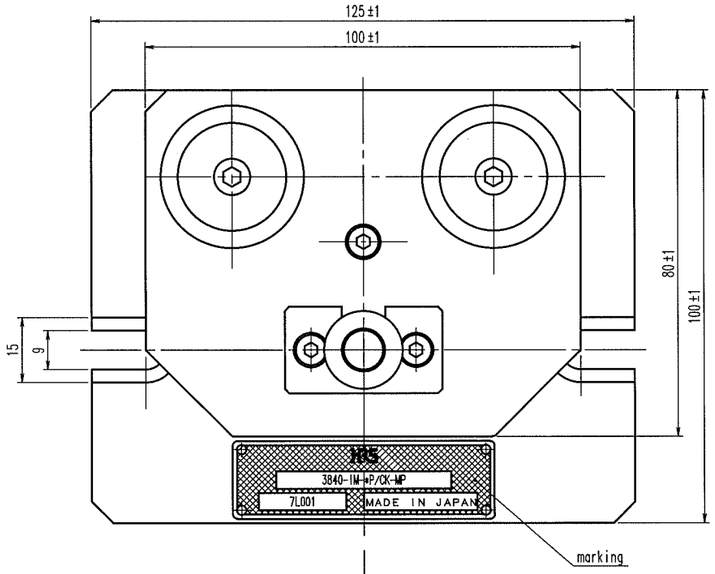

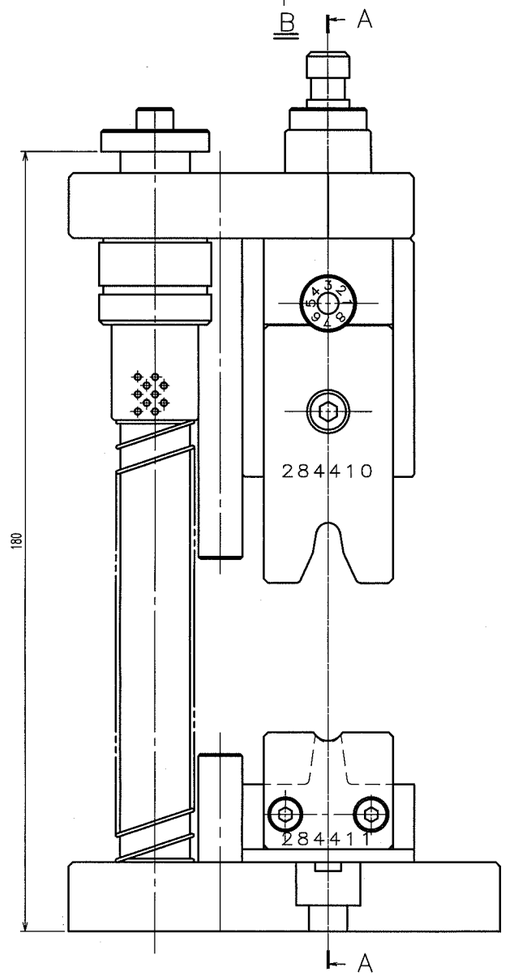

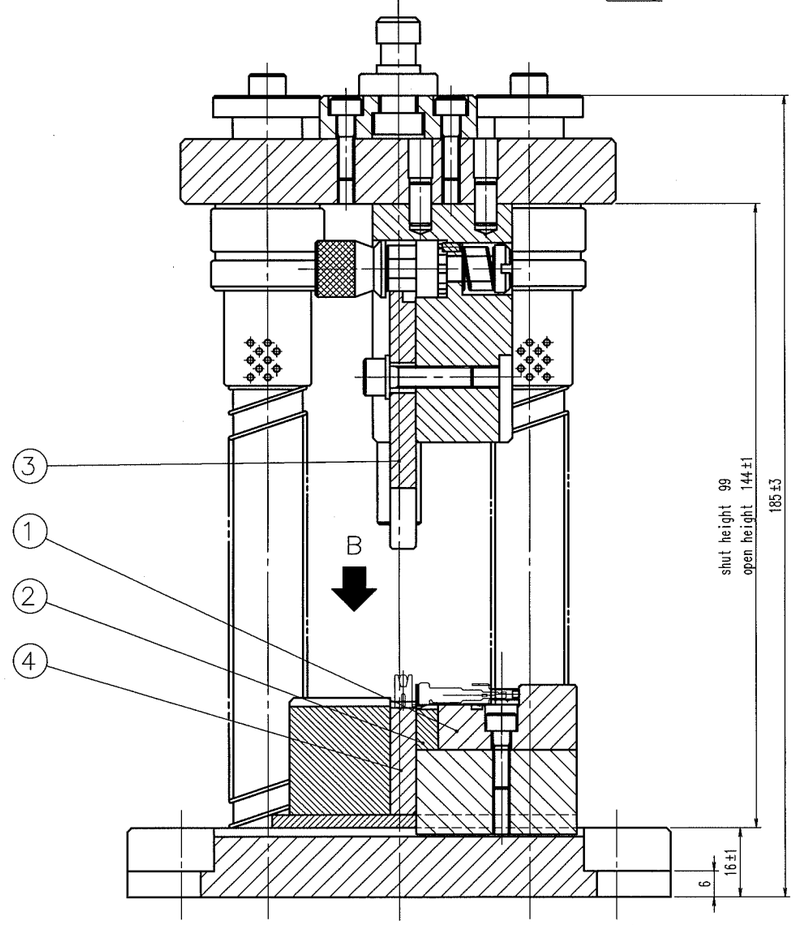

A–A

Notes. This figure shows the assembly of crimping jig for 3840.

NO.	MATERIAL	FINISH, REMARKS	NO.	MATERIAL	FINISH, REMARKS
2			4		
1			3		

CODE NO.(OLD)	DRAWN	DESIGNED	CHECKED	APPROVED	RELEASED
	Y.KUSABIRAKI 07.11.6	Y.KUSABIRAKI 07.11.6	S.TOYODA 07.11.15	S.SAKABE 07.11.15	

SCALE 1 : 1
UNITS mm

DRAWING NO. EDC2-275916

PART NO. 3840-IM/CK-MP

HRS HIROSE ELECTRIC CO.,LTD.

CODE NO. CL902-2146-3

1/1

FORM NO.230

TO
PE