PF2470 Series

TO-247 Power Thin Film Resistors

In Stock at DIGI-KEY

RIEDON

RoHS compliant

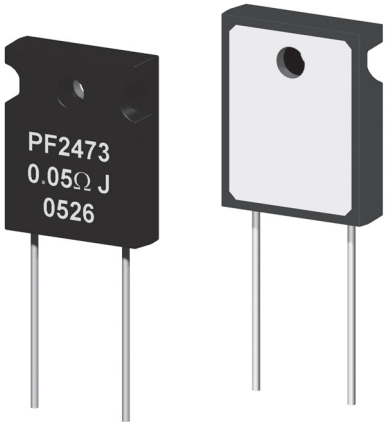

- **TO-247 Housing**
- **Rated Power to 140 Watts**
- **Resistances from 0.02 to 51K Ohms**
- **High Stability Film Resistance Elements**
- **Resistance Tolerance to ±1%**
- **Low Inductance (<50nH)**
- **Isolated Back Plate**

SPECIFICATIONS

Type	Power Rating		Thermal Resistance	Resistance Range[3]		Tolerances	Temperature Coefficients
	Heatsink[1]	Free Air[2]		Min	Max		
PF2473	140W	5W	0.9°C/W	0.02Ω	51KΩ	±1% (R≥0.10Ω) ±5%	±50ppm/°C (R≥10Ω) ±100ppm/°C (0.1Ω ≤ R < 10Ω) ±250ppm/°C (R < 0.1Ω)
PF2472	100W	3W	1.3°C/W	0.02Ω	51KΩ	±1% (R≥0.10Ω) ±5%	±50ppm/°C (R≥10Ω) ±100ppm/°C (0.1Ω ≤ R < 10Ω) ±250ppm/°C (R < 0.1Ω)

[1] Power rating based on 25°C Flange Temperature
[2] Power rating based on 25°C Ambient Temperature
[3] Consult Factory for Higher or Lower Values

Specification	Value	
Temperature Range	-55°C to +155°C	
Dielectric Strength	2500 VAC	
Max. Operating Voltage	700 V or √P*R, whichever is less	
Insulation Resistance	>1000 Meg-Ohm	
Environmental Performance	**ΔR**	**Test Conditions**
Load Life	±1% + 0.05Ω	25°C, 90 min ON, 30 min OFF, 1000 hr
Humidity Resistance	±1% + 0.05Ω	40°C, 90-95% RH, DC 0.1W, 1000 hr
Temperature Cycle	±0.25% + 0.05Ω	-55°C for 30 min, +155°C for 30 min, 1000 hr
Solder Heat	±0.1% + 0.05Ω	+350°C, 3s
Vibration	±0.25% + 0.05Ω	IEC60068-2-6

Riedon Inc. 300 Cypress Avenue Alhambra CA 91801 (626) 284-9901 (626) 284-1704
www.riedon.com

SPECIFICATIONS (continued)

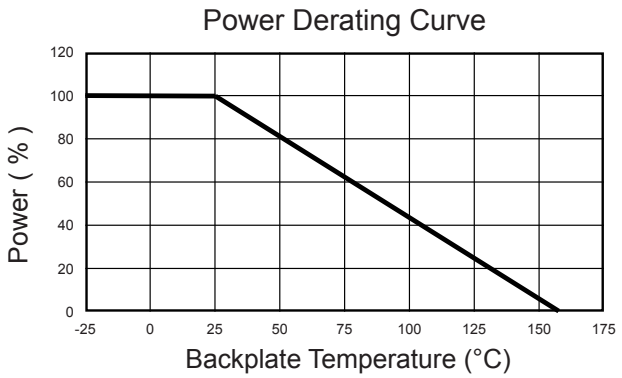

Power Rating Notes -

The PF2470 Series Thin Film Resistors must be attached to a suitable heatsink. The maximum internal resistor temperature is 155°C (120°C for the PF2201).

To specify an appropriate heatsink use the following formula :

$$R_{\theta H} = \frac{T_{MAX} - (P \times R_{\theta R}) - T_A}{P}$$

Where:
$R_{\theta H}$ = Thermal Resistance of Heatsink (°C/W)
$R_{\theta R}$ = Thermal Resistance of Resistor (°C/W)
T_{MAX} = Maximum Temperature of Resistor
T_A = Ambient Temperature of Heatsink (°C)
P = Power Through Resistor (W)

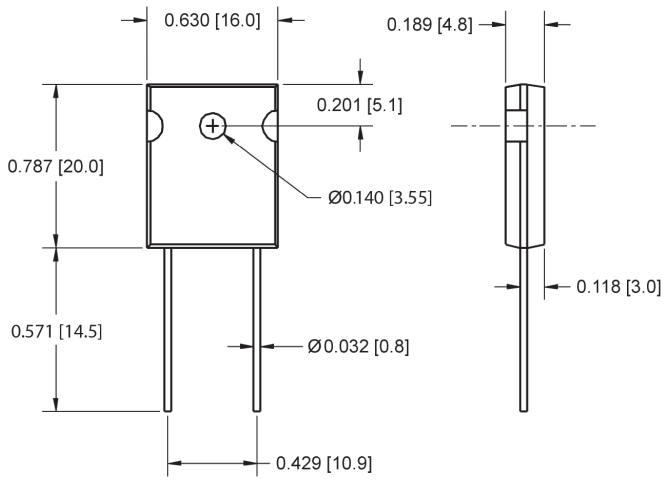

Mounting Notes -

The PF2470 Series Thin Film Resistors must be attached to a suitable heatsink. Mount resistor using thermal grease to a clean, flat surface. Use a compression washer to provide 150 to 300 pounds (665 to 1330N) of mounting force. Torque mounting screw to 8 in-lbs (0.9 N-m).

Back plate is isolated from both pins.

Ordering Information

Part Number - Resistance - Tolerance - TCR
Example: PF2472 10 Ohm 1% 50ppm